GasTeh

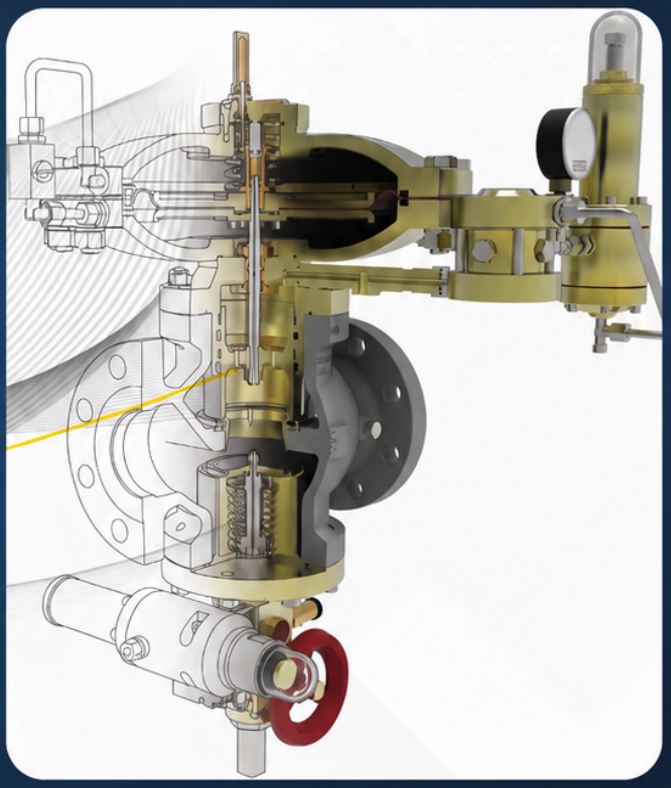

Technical Catalog

www.gasteh.ru www.atrest.ru

Technical
catalog

April 2026

PRODUCTION OF GAS AND ENERGY EQUIPMENT

FOR THE DESIGN AND CONSTRUCTION OF GAS INSTALLATIONS AND DEVICES

GasTeh d.o.o. is a leading company in natural gas application and operation technologies,

liquefied petroleum gas, compressed natural gas, liquefied natural gas, synthetic natural gas and other technical gases in the region. The range, products and services of GasTeh d.o.o. demonstrate expertise and many years of experience in developing and manufacturing equipment and installations. Product quality and reliability are ensured by modern technologies in engineering, design, production, inspection and testing; the broad product range therefore fully complies with national and international

standards.

Product applications:

GasTeh d.o.o. products are used in gas industry installations, including:

- natural gas (NG) installations and devices;
- liquefied petroleum gas (LPG) installations and devices;
- compressed natural gas (CNG) installations and devices;
- liquefied natural gas (LNG) installations and devices;
- synthetic natural gas (LPG-air) installations and devices;

Product applications by nominal pressure

GasTeh d.o.o. equipment and devices are manufactured for a wide range of nominal pressures, classified as follows:

- low pressure
- medium pressure
- high pressure
- very high pressure above 100 bar

Standards and certificates

The following standards have been implemented to ensure quality and reliable operation:

- ISO 9001 : 2015
- ISO 14001 : 2015
- ISO/IEC 17025 : 2005
- OHSAS 18001 : 2008
- ISO 3834-2

EAC certification has been completed,

certification authorising the CE and 3A marks to be affixed to products in accordance with the Serbian standard and the European PED Directive.

APPLICATIONS OF GasTeh D.O.O. EQUIPMENT

Natural gas (NG):

- GDS (gas distribution station);
- GRP, SRP and GRU for industrial and residential consumers;
- control stations;
- metering stations;
- high-pressure manifolds.



Liquefied petroleum gas (LPG):

- LPG installations;
- LPG storage.



Compressed natural gas (CNG):

- GRP, SRP and GRU for compressed natural gas (CNG)



Liquefied natural gas (LNG)



Synthetic natural gas (LPG-air):

- CYT-air mixing unit.



Standards and certificates









ISO 9001 **ISO 14001** **ISO 17025** **ISO 18001**







ISO 3834-2 CE





EAC

TESTING LABORATORY FOR

GAS EQUIPMENT



CONTENTS

GROUP 100 PRESSURE REGULATION EQUIPMENT AND DEVICES

SERIES 110 SMALL AND PILOT REGULATORS

Type: 112 MEDIUM-PRESSURE REGULATOR 8-9

Type: 113 HIGH-PRESSURE REGULATOR 10-11

Type: 114 HIGH-PRESSURE REGULATOR 12-13

SERIES 120 DIRECT-ACTING PRESSURE REGULATORS

Type: 121, 121-BV LOW-PRESSURE REGULATORS WITHOUT OR WITH SAFETY SHUT-OFF VALVE 14-19

Type: 121-BV LOW-PRESSURE REGULATORS WITH SAFETY SHUT-OFF VALVE 20-25

Type: 123, 123-BV LOW-PRESSURE REGULATORS WITHOUT OR WITH SAFETY SHUT-OFF VALVE 26-29

Type: 124, 124-BV LOW-PRESSURE REGULATORS WITHOUT OR WITH SAFETY SHUT-OFF VALVE 30-33

Type: 125, 125-BV HIGH-PRESSURE REGULATORS WITHOUT OR WITH SAFETY SHUT-OFF VALVE 34-39

Type: 126-Junior HIGH-PRESSURE REGULATORS WITHOUT OR WITH SAFETY SHUT-OFF VALVE 40-41

Type: 126-AX DIRECT-ACTING AXIAL HIGH-PRESSURE REGULATORS 42-47

Type: 127, 127-BV LOW-PRESSURE REGULATORS WITHOUT OR WITH SAFETY SHUT-OFF VALVE 48-53

Type: 128 HIGH-PRESSURE REGULATORS WITH GAS SPRING 54-55

Type: 128-P HIGH-PRESSURE REGULATORS WITH GAS SPRING 56-57

SERIES 130 PILOT-OPERATED LOW- AND MEDIUM-PRESSURE REGULATORS

Type 131, 131-BV PRESSURE REGULATORS WITHOUT OR WITH SAFETY SHUT-OFF VALVE 58-63

Type: 132, 132-BV PRESSURE REGULATORS WITHOUT OR WITH SAFETY SHUT-OFF VALVE 64-69

Type: 135, 135-BV PRESSURE REGULATORS WITHOUT OR WITH SAFETY SHUT-OFF VALVE 70-75

Type: 135-AX AXIAL PRESSURE REGULATORS (WITH SILENCER) 76-79

Type: 137, 137-BV PRESSURE REGULATORS WITHOUT OR WITH SAFETY SHUT-OFF VALVE 80-85

Type: 139, 139-BV PRESSURE REGULATORS WITHOUT OR WITH SAFETY SHUT-OFF VALVE 86-93

SERIES 140 PILOT-OPERATED HIGH-PRESSURE REGULATORS

Type: 143, 143-BV PRESSURE REGULATORS WITHOUT OR WITH SAFETY SHUT-OFF VALVE 94-99

Type: 149, 149-BV PRESSURE REGULATORS WITHOUT OR WITH SAFETY SHUT-OFF VALVE 100-105

GROUP 200 SAFETY EQUIPMENT AND DEVICES

SERIES 210 DIRECT-ACTING SPRING-LOADED SAFETY BLOW-OFF AND RELIEF VALVES

Type: 211 DIAPHRAGM-OPERATED SAFETY BLOW-OFF VALVE 106-107

Type: 212 DIAPHRAGM-OPERATED SAFETY BLOW-OFF VALVE 108-109

Type 214 SAFETY RELIEF VALVE 110-111

Type 214-TG SAFETY RELIEF VALVE 112-113

Type 215 SAFETY BLOW-OFF VALVE 114-115

Type: 217 SAFETY BLOW-OFF VALVE 116-119

Type: 218-UN SAFETY BLOW-OFF VALVE 120-121

Type: 218-UP SAFETY BLOW-OFF VALVE (ANGLE, FLANGED) 122-123

Type: 219-VP SAFETY BLOW-OFF VALVE (ANGLE AND STRAIGHT-THROUGH) 124-125

Type: 219-B-VP SAFETY BLOW-OFF VALVE (FLANGED) 126-127

SERIES 220 PILOT-OPERATED SAFETY BLOW-OFF AND RELIEF VALVES

Type: 222 SAFETY BLOW-OFF AND RELIEF VALVE 128-129

Type: 226 SAFETY BLOW-OFF AND RELIEF VALVE 130-131

SERIES 230 SAFETY SHUT-OFF VALVES

тип: 231-BV LOW-PRESSURE SAFETY SHUT-OFF VALVE 132-135

Type: 232-BV LOW- AND MEDIUM-PRESSURE SAFETY SHUT-OFF VALVE 136-139

Type: 234-BV HIGH-PRESSURE SAFETY SHUT-OFF VALVE 140-143

Type: 235-BV HIGH-PRESSURE SAFETY SHUT-OFF VALVE 144-145

Type: 236, 236-K SAFETY SHUT-OFF VALVE FOR GAS AND OIL HEATING SYSTEMS 146-147

Type: 238-S,238-N,238-P EXCESS-FLOW (EMERGENCY SHUT-OFF) VALVE 148-151

SERIES 240 CHANGEOVER DEVICES FOR SAFETY VALVES (DISTRIBUTION HEAD)

Type: 242 CHANGEOVER DEVICE FOR TWO SAFETY VALVES 152-153

Type: 244 CHANGEOVER DEVICE FOR FOUR SAFETY VALVES 154-155

GROUP 300 ISOLATING VALVES

SERIES 320 FULL-BORE SHUT-OFF, MANUAL CONTROL AND SHUT-OFF/CONTROL VALVES

Type: 321 FULL-BORE SHUT-OFF VALVE 156-157

Type: 323 FULL-BORE CONTROL VALVE 158-159

Type: 325 STOP-CHECK VALVE 160-161

SERIES 330 ELECTROPNEUMATIC VALVES

Type: 331 DIAPHRAGM-OPERATED ELECTROPNEUMATIC VALVE 162-163

SERIES 340 PNEUMATIC VALVES

Type: 344 PISTON-OPERATED PNEUMATIC VALVE 164-165

Type: 344-M, 344-M/K DIAPHRAGM-OPERATED PNEUMATIC VALVE 166-167

SERIES 350 NON-RETURN VALVES

Type: 351 NON-RETURN VALVE... 168-169

SERIES 360 CHECK VALVES

type: 363 CHECK VALVE 170-171

type: 368 COMBINED CHECK AND CONTROL VALVE 172-173

SERIES 370 CONTROL DEVICE VALVES

type: 372 PRESSURE-GAUGE RELIEF VALVE 174-175

type: 373 THREE-WAY PRESSURE-GAUGE COCK 176-177

type: 376 MANUAL CONTROL VALVE 178-179

GROUP 400 PROCESS EQUIPMENT

SERIES 410 GAS FILTERS

type: 411 GAS IMPURITY COLLECTOR... 180-181

type: 413 GAS FILTER WITH PERMANENT CARTRIDGE 182-183

type: 413-V GAS FILTER WITH PERMANENT CARTRIDGE 184-185

type: 414/1, 414/2 FINE GAS FILTERS WITH REPLACEABLE CARTRIDGE 186-193

type: 418 GAS CONDENSATE SEPARATOR 194-195

SERIES 420 HEAT EXCHANGERS AND LPG EVAPORATORS

type: 421-H, 421-V GAS HEATER 196-199

type: 421-E ELECTRIC CNG HEAT EXCHANGER 200-201

type: 421-TV CNG HEAT EXCHANGER – HOT-WATER HEATING MEDIUM 202-203

type: 423/E ELECTRIC EVAPORATOR 204-209

type: 424/TV, 424/PV EVAPORATOR (HOT WATER OR STEAM) 210-215

SERIES 430 GAS ODORIZERS

type: 431, 432 ABSORPTION GAS ODORIZERS 216-219

type: 433, 434, 435 ABSORPTION GAS ODORIZERS 220-223

SERIES 450 SILENCERS

type: 451 SILENCER 224-225

GROUP 500 PIPE CONNECTION COMPONENTS

SERIES 510 PIPE INSULATING CONNECTIONS

type: 511, 512 INSULATING COUPLINGS 226-227

type: 514 INSULATING FLANGE JOINT 228-229

GROUP 600 INSTRUMENTATION AND MEASURING EQUIPMENT

SERIES 610 INDICATING DEVICES

type: 611 LIQUID FLOWMETER 230-231

type: 616 DIFFERENTIAL PRESSURE INDICATOR 232-233

SERIES 620 MEASURING DEVICES

type: 621 ROTARY LIQUID LEVEL INDICATOR FOR STORAGE AND VEHICLE TANKS 234-235

type: 622 THREE-POSITION LIQUID LEVEL INDICATOR 236-237

type: 624-H, 624-V MAGNETIC-TRANSMISSION LEVEL INDICATOR 238-239

GROUP 700

SERIES 750 LPG/AIR VENTURI MIXER

type: 751 DUAL-INJECTOR VENTURI MIXER 240-243

GROUP 800 ELECTRICAL EQUIPMENT

SERIES 810 ELECTRIC HEATERS

type: 811, 812 ELECTRIC HEATERS – Ex VERSION (EXPLOSION-PROTECTED) 244-245

SERIES 820 THERMOSTAT

type: 821 THERMOSTAT – Ex (EXPLOSION-PROOF) 246-247

GROUP 900 OTHER EQUIPMENT

SERIES 910 WATER NOZZLES

type: 911-UM, 912-RM ANGLE AND STRAIGHT NOZZLES 248-249

SERIES 110

SMALL AND PILOT REGULATORS

MEDIUM-PRESSURE REGULATORS



Type: 112

parameters

Inlet pressure: p1 = max 19 bar (kgf/cm²)

Outlet pressure: p2 = 0.2–10 bar (kgf/cm²)

Sizes: G1/4"–G3/4"

PN25

Climate version: U and KhL (down to −60 °C)

application

NATURAL GAS, PROPANE-BUTANE,

air, nitrogen and industrial gases

INSTALLATION AND PURPOSE

Pressure regulator type 112 is a direct-acting regulator that maintains a stable outlet pressure p within accuracy class RG, regardless of changes in inlet pressure p

and gas flow rate.

The regulator must operate with clean gas; a filter must be installed upstream. Install the regulator horizontally, normally for right-to-left gas flow. With no inlet pressure, type 112 is closed: spring force holds seat disc 3 against seat 2. When gas enters the inlet pipe, inlet pressure passes through seat 2 and

opens seat disc 3. The required outlet pressure is set using adjusting screw 6 and regulator spring 5. Through the bracket, spring 5 acts on seat disc 3 and maintains the required outlet pressure. If outlet pressure rises above the setpoint, pressure on diaphragm 7a overcomes spring 5, allowing spring 4 to close the regulator. Diaphragm 7b is perforated and does not participate in outlet-pressure control.

materials

Pos.	Description	Material	Pos.	Description	Material
1	body	Alsi	6	Adjusting screw	CW614N (CuZn40)
2	seat	CW614N (CuZn40)	7a	diaphragm	Effbe
3	Seat disc	CW614N (CuZn40)	7b	diaphragm	Effbe
4	spring	C-steel spring | 9		Pressure gauge	/
5	Adjusting spring	C-steel spring | 10		Cap	Plastic

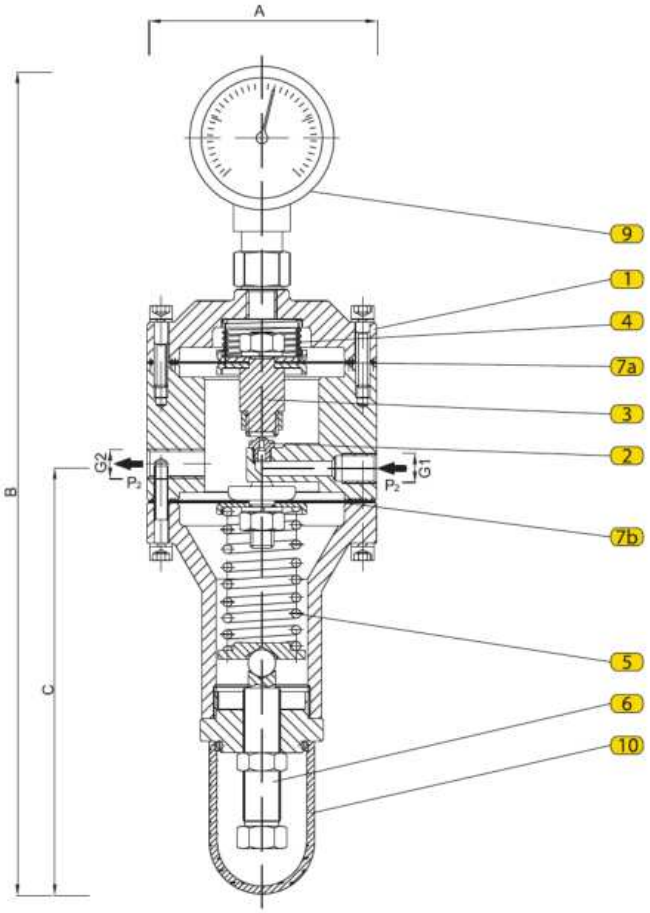

dimensions

G1	G2	A	B	C
1/4"	1/4"	100	363	189
	1/2"	100	363	189
1/2"	1/2"	100	363	189
	3/4"	100	363	189

ACCURACY CLASSES

G1	G2	P2(bar)	RG	ZG
1/4"	1/4"	(1-10)	5	10
	1/2"			
1/2"	1/2"			
	3/4"			

GasTeh

SERIES 110

SMALL AND PILOT REGULATORS

HIGH-PRESSURE REGULATORS



Type: 113

parameters

Inlet pressure: p1 = max 100 (160) bar (kgf/cm²)

Outlet pressure: p2 = 2–22 bar (kgf/cm²)

Sizes: G1/4"–G1/2" PN100/160

Climate version: U and KhL (down to −60 °C)

application

NATURAL GAS, PROPANE-BUTANE,

air, nitrogen and industrial gases

INSTALLATION AND PURPOSE

Pressure regulator type 113 is a direct-acting regulator that maintains stable outlet pressure p within accuracy class RG, regardless of changes in inlet pressure p and gas flow. It must operate with clean gas; a filter must be installed upstream. Install it horizontally. Normally,

the regulator is installed for right-to-left gas flow. With no inlet pressure, type 113 is closed: spring force holds seat disc 3 against seat 2.

When gas enters the inlet pipe, inlet pressure passes through seat 2 and opens seat disc 3. The required outlet pressure is set with adjusting screw 6 and regulator spring 5. Through the bracket, spring 5 acts on seat disc 3 and maintains the required pressure. If outlet pressure rises above the setpoint, pressure on piston 8

overcomes spring 5; spring 4 closes the regulator. Diaphragm 7 is perforated and does not

participate in outlet-pressure control.

materials

Pos.	Description	Material	Pos.	Description	Material
1	body	Steel 40Kh	6	Adjusting screw	Steel 10kp
2	seat	Steel 12Kh18N10T	7	diaphragm	Effbe
3	Seat disc	LS59-3	8	Piston	X5CrNi18-10
4	spring	Steel 50KhFA	9	Pressure gauge	/
5	Adjusting spring	Steel 50KhFA	10	Cap	Plastic

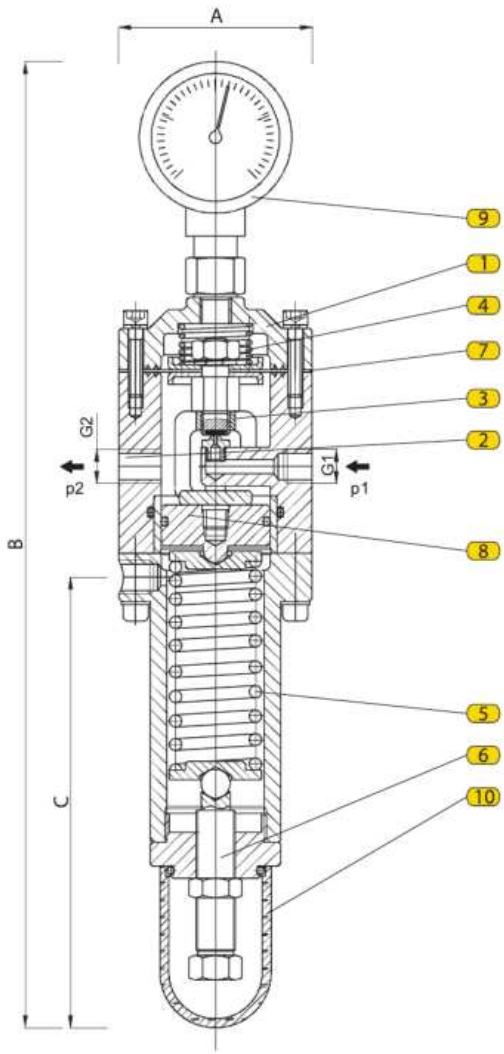

dimensions

G1	G2	A	B	C
1/4"	1/4"	80	401	187
	1/2"	80	401	187
1/2"	1/2"	80	401	187

ACCURACY CLASSES =

G1	G2	P2(bar)	RG	ZG
1/4"	1/4"	(2-22)	5	10
	1/2"			
1/2"	1/2"			

SERIES 110

SMALL AND PILOT REGULATORS

HIGH-PRESSURE REGULATORS



Type: 114

parameters

Inlet pressure: p1 = max 250

Outlet pressure: p2 = 3–30 bar

Sizes: G1/4"–G3/4" PN25, G3/4"–G1" PN250

Accuracy class AC: ±5%

Lock-up pressure class SG: up to 10%

application

CNG, NATURAL GAS,

NITROGEN AND INDUSTRIAL GASES

INSTALLATION AND PURPOSE

Gas pressure regulator type 114 is a high-pressure regulator that maintains set outlet pressure p2 within control class RG, regardless of flow or inlet pressure p1. Outlet pressure is sensed through the impulse port. The regulator is rated up to 250 bar and 60 °C. Inlet and outlet connections are threaded. Spring force is shown on the body-mounted pressure gauge. Ensure the upstream piping is clean. The standard throttle direction is to the right of the lever (see drawings).

dimensions

DN	G_1	G_2	ØA	B	C	L
			(mm)			
15	1/2"	3/4"	108	200	380	245
20	3/4"	1"	108	200	380	245

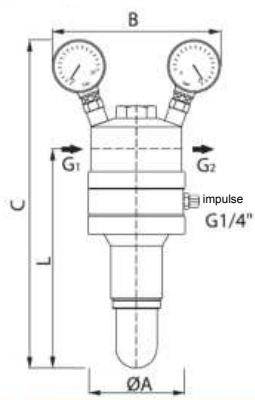

diagram

Pos.	Name
1	regulator body
2	Closure assembly
3	spring housing
4	Plug
5	spring
6	Regulator seat
7	Stem tensioner
8	stem
9	diaphragm
10	cover
11	Adjusting screw

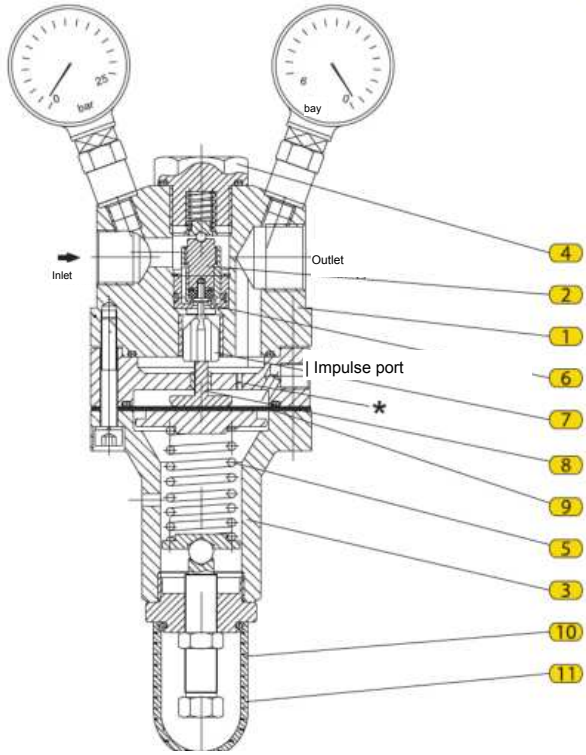

- Port (3 + 5):D connected to outlet pipe

* If required, the regulator is supplied without an external impulse port and uses an internal impulse connection, reducing regulator capacity by 30%.

operating principle

With no gas in the pipeline, regulator type 114 is open: spring (5), through the diaphragm, holds stem (8) and closure assembly (2) open. When gas is admitted, pressure acts on the diaphragm through assembly (2) and stem (8), overcomes spring (5), and throttles the regulator until p2 reaches its setpoint. If p2 rises, diaphragm force closes assembly (2) against seat (6). A pressure drop reopens the regulator. Spring force is adjusted with screw (11).

CONTROL CHARACTERISTICS

LENGTH (mm)	KG (mm)
7,5	30
10	60

Ks – regulator setting coefficient

Pressure regulator type 114 complies with SRPS EN 334. The manufacturer reserves the right to change the product's technical data to improve the product.

SERIES 120

pressure regulators

DIRECT-ACTING

LOW-PRESSURE REGULATORS

WITH OR WITHOUT SAFETY SHUT-OFF VALVE



Type: 121

parameters

Inlet pressure: p1 = max 19 bar

Outlet pressure: p2 = 0.02–0.5 (1) bar

Sizes: DN25–DN50 PN16/25, ANSI150

climatic version: U and KhL (down to -60 °C)



Type: 121-BV

application

natural gas, propane-butane

air, nitrogen and industrial gases

INSTALLATION AND PURPOSE

Pressure regulator type 121 is direct-acting and maintains stable outlet pressure p2 within accuracy class AC regardless of inlet pressure p1 and gas flow variations. Its breather valve protects the diaphragm against rupture during a sudden pressure rise and relieves the control line by throttling. Impulse line V1 supplies gas at pressure p2 to the control diaphragm mechanism, which balances the forces above and below the diaphragm and provides the preset outlet

pressure.

The regulator has an integral safety shut-off valve (SSV), tripping on both high and low outlet pressure. Impulse line V2 supplies gas to the SSV. A regulator with integral SSV is designated 121-BV. Use only with clean gas and install a filter upstream. The regulator may be installed horizontally or vertically. A G3/4" threaded port connects the breather-valve vent line for discharge outdoors. Standard installation is for left-to-right gas flow.

I inlet shut-off valve
filter
III pressure regulator type 121-BV
IV safety valve
V vent valve

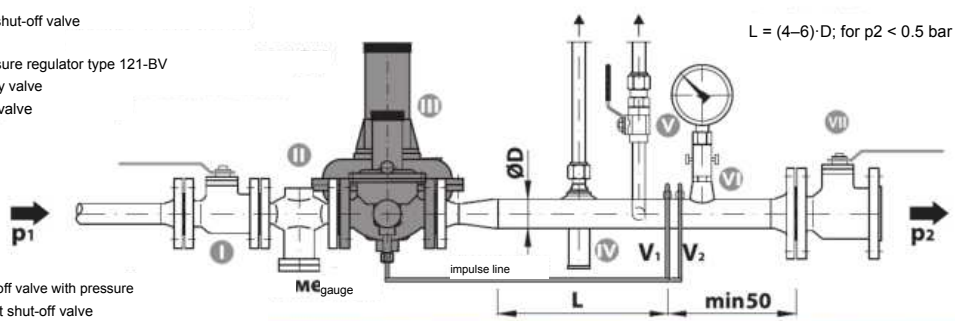

VI shut-off valve with pressure
VII outlet shut-off valve

operation

Initially, when there is no gas in the pipeline, pressure regulator type 121-BV is open: under the action of spring 7 of the diaphragm mechanism, lever 5 and stem 4, plug 3 is lifted off the seat.

2).

Gas at outlet pressure p2 enters the lower diaphragm chamber, overcomes spring 7, moves diaphragm 6 and closes the regulator until preset p2 is reached. If p2 rises, the force below the diaphragm increases and closes the regulator against spring force and the p1 force on plug 3. If p2 falls, spring 7 acts through lever 5 and opens the regulator until p2 is restored. The p2 deviation at closure corresponds to lock-up class SG. Downstream pressure controls opening and closing; the main function is to maintain

a constant outlet pressure p2 within regulation accuracy class AC. Spring 7 force

is adjusted by spring adjuster 8.

SSV OPERATION

If pressure exceeds the permitted SSV trip setting, the SSV diaphragm mechanism moves upward, pulls lever 22 and releases latch tooth 18. Sleeve 15 and stem 14 are released, and stem spring 19 presses plug 12 onto seat 2. High-pressure tripping occurs against HP spring 20, set by HP adjusting nut 21. Low-outlet-pressure tripping is produced by LP spring 16, which moves the diaphragm mechanism downward; lever 22 releases the latch and trips the SSV. LP spring 16 is set by LP adjusting nut 17.

The SSV may be reset only manually, after determining and eliminating the cause of

tripping, as follows:

Unscrew reset handle 23 from SSV body 13, turn it over and screw it onto SSV stem 14. Pull handle 23 slowly and hold it for several seconds until pressure across the SSV equalizes. Then pull it fully; stem 14 must latch in the reset position. The SSV is reset. Unscrew handle 23, turn it over and screw it back into

body 13.

SSV reset

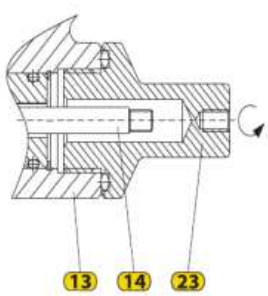

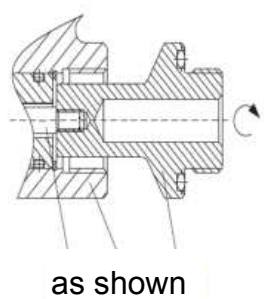

as shown

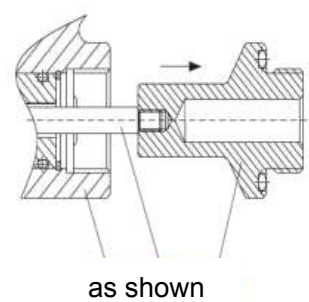

as shown

materials

Item	Description	Material									
	pressure regulator		8. Adjusting nut		Steel St3ps; St3sp	16.	LP spring	Spring steel wire
			9. Diaphragm housing		Al alloy AK9ch	17.	LP adjusting nut	Steel St3ps; St3sp
1.	regulator body	Steel 20L	10.	spring housing	Al alloy AK9ch	18.	Latch tooth	Steel 20Kh13
2.	seat	Brass LS-58-3	11.	Ring	Steel St3ps; St3sp	19.	Stem spring	Spring steel wire
3.	Seat disc	Brass LS-58-3	SSV			20.	HP spring	Spring steel wire
4.	stem	Steel 08Kh18N10	12.	valve disc	Brass LS-58-3	21.	HP adjusting nut	Steel St3ps; St3sp
5.	lever	Steel 08; 08kp	13.	SSV body	Al alloy AK9ch	22.	lever	Steel 08; 08kp
6.	diaphragm	EFFBE	14.	stem	Steel 08Kh18N10	23.	Reset handle	Brass LS-58-3
7.	spring	Spring steel wire	15.	Sleeve	Steel 08Kh18N10	24.	Stem extension	Brass LS-58-3

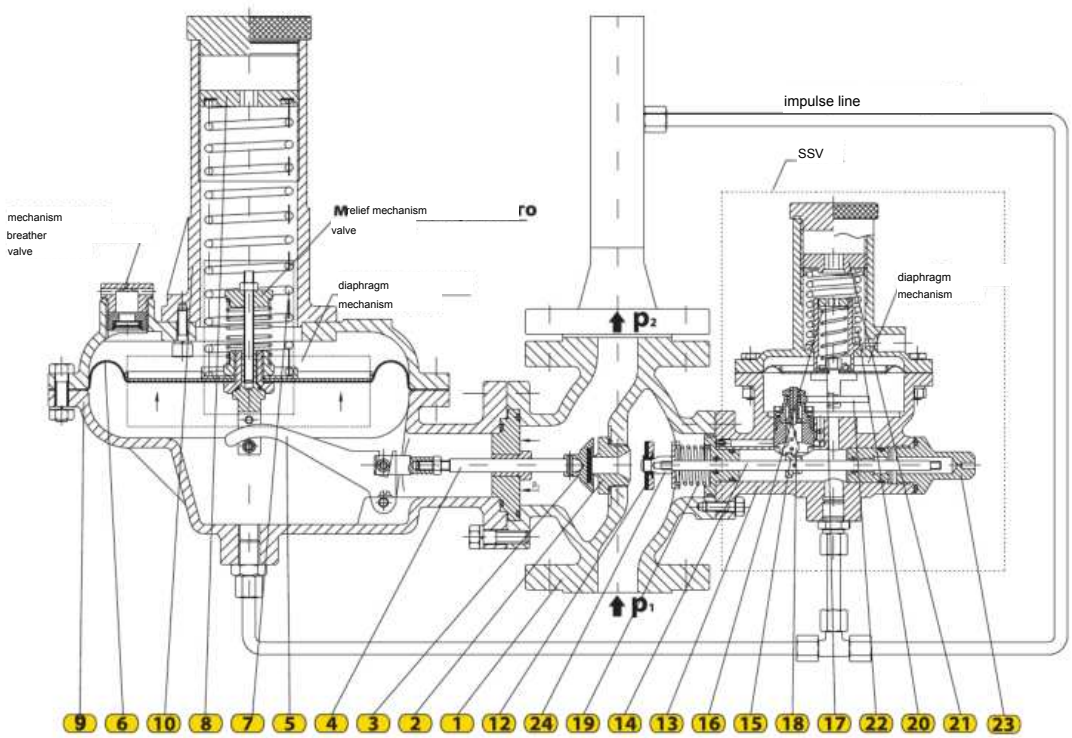

VM version, outlet pressure: p2 = 0.5–1 bar

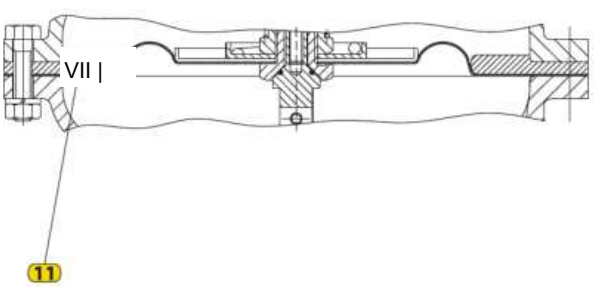

Pressure regulator type: 121, 121-BV

inlet pressure (bar)	Qd (.....)	Outlet pressure p2 (bar)					DN25
		0,02	0,05	0,10	0,20	0,30	0,50
0,5	6	38	38	34	28	25	-
	7	45	45	45	45	37	-
	8	48	57	57	51	42	-
	10	64	79	91	76	60	-
	12	72	84	96	79	70	-
	14	87	97	115	109	112	-
1	6	44	44	50	45	45	35
	7	64	68	72	66	58	58
	8	68	79	90	70	65	65
	10	93	116	130	112	100	100
	12	100	120	139	124	118	118
	14	117	139	174	150	150	150
2	6	70	70	74	74	74	74
	7	91	98	110	100	100	100
	8	94	127	133	109	109	109
	10	128	169	194	165	165	165
	12	140	182	250	187	187	187
	14	160	211	260	220	220	220
3	6	103	103	103	103	96	96
	7	120	130	130	130	119	119
	8	130	158	176	150	150	150
	10	140	235	271	220	220	220
	12	160	260	336	240	240	240
	14	160	260	360	280	280	280
4	6	117	130	130	130	130	130
	7	130	166	171	156	156	156
	8	141	220	220	180	180	180
	10	185	281	320	250	250	250
	12	217	305	390	280	280	280
5	6	132	150	150	150	150	150
	7	140	187	201	183	183	183
	8	148	239	261	210	210	210
	10	192	334	379	280	280	280
	12	-	379	452	300	300	300
6	6	150	180	180	180	180	180
	7	168	232	240	220	220	220
	8	182	281	314	245	245	245
	10	-	380	443	320	320	320
	12	-	-	517	350	350	350
8	6	160	230	230	230	230	230
	7	191	259	286	260	260	260
	8	200	273	400	285	285	285
	10	-	-	529	420	420	420
	12	-	-	543	440	440	440
10	6	167	285	285	285	285	285
	7	207	303	360	315	315	315
	8	-	-	471	350	350	350
	10	-	-	645	450	450	450
12	6	225	320	320	320	320	320
	7	-	360	400	375	375	375
	8	-	-	510	420	420	420
	10	-	-	720	510	510	510
16	6	250	350	350	350	350	350
	7	-	-	420	370	370	370
	8	-	-	540	450	450	450
19	6	275	380	380	380	380	380
	7	-	-	450	410	410	410
	8	-	-	-	-	580	580

inlet pressure (bar)	Ød (mm)	Outlet pressure p2 (bar)					DN32
		0,02	0,05	0,10	0,20	0,30	0,50
0,5	6	40	40	40	35	33	-
	7	48	48	50	50	44	-
	8	50	60	70	65	58	-
	10	70	85	95	90	70	-
	12	78	90	115	100	90	-
	14	98	102	137	110	110	-
1	6	54	54	54	50	50	50
	7	72	76	81	72	72	72
	8	80	85	106	84	84	84
	10	100	120	140	112	100	100
	12	112	124	170	132	126	126
	14	135	157	214	160	160	160
2	6	80	80	80	80	80	80
	7	92	106	116	110	110	110
	8	112	140	140	130	130	130
	10	130	191	207	160	160	160
	12	150	212	260	190	190	190
	14	165	240	285	225	225	225
3	6	106	106	106	106	106	106
	7	125	135	135	135	135	135
	8	140	185	196	165	165	165
	10	150	245	277	190	190	190
	12	170	270	350	250	250	250
	14	180	280	370	290	290	290
4	6	120	130	130	130	130	130
	7	135	170	178	178	178	178
	8	152	232	240	240	240	240
	10	185	300	340	260	260	260
	12	220	380	412	310	310	310
5	6	145	160	160	160	160	160
	7	165	190	205	205	205	205
	8	190	257	281	220	220	220
	10	213	340	400	290	290	290
	12	-	385	460	315	315	315
6	6	160	185	185	185	185	185
	7	180	240	250	230	230	230
	8	194	290	328	316	270	270
	10	-	385	480	375	350	350
	12	-	-	520	400	380	380
8	6	195	250	250	250	250	250
	7	230	280	310	310	310	310
	8	260	295	420	350	350	350
	10	-	-	580	440	440	440
	12	-	-	625	460	460	460
10	6	230	290	290	290	290	290
	7	270	320	370	340	340	340
	8	-	-	580	410	410	410
	10	-	-	660	460	460	460
12	6	268	350	350	350	350	350
	7	-	370	430	400	400	400
	8	-	-	552	450	450	450
	10	-	-	810	550	550	550
16	6	280	380	380	380	380	380
	7	-	-	450	420	420	420
	8	-	-	580	500	500	500
19	6	300	410	410	410	410	410
	7	-	-	500	460	460	460
	8	-	-	-	-	620	620

flow tables

inlet pressure (bar)	Qd (mm)	Outlet pressure p2 (bar) 0,02	0,05	0,10	0,20	0,30	0,50
0,5	8	60	60	60	60	60	-
	10	75	88	100	90	90	-
	12	93	106	130	117	105	-
	16	115	154	170	160	135	-
	18	140	166	228	176	155	-
	20	172	185	248	198	165	-
1	8	80	90	110	90	90	90
	10	120	132	151	140	125	125
	12	146	172	196	168	150	150
	16	186	220	235	210	180	180
	18	197	245	330	260	230	230
	20	214	260	364	290	250	250
2	8	140	140	140	140	140	140
	10	167	195	231	190	190	190
	12	225	261	297	220	220	220
	16	289	340	360	290	290	290
	18	-	360	500	340	340	340
	20	-	360	520	370	370	370
3	8	190	190	190	190	190	190
	10	225	267	285	240	240	240
	12	-	308	375	280	280	280
	16	-	340	460	350	350	350
	18	-	390	594	400	400	400
	20	-	390	650	450	450	450
4	8	220	220	220	220	220	220
	10	-	280	360	300	300	300
	12	-	390	470	350	350	350
	16	-	400	530	400	400	400
	18	-	490	610	450	450	450
	20	-	-	680	510	510	510
5	8	240	260	280	260	260	260
	10	-	340	430	350	350	350
	12	-	454	557	385	385	385
	16	-	460	630	430	430	430
	18	-	520	690	550	550	550
	20	-	-	780	650	650	650
6	8	-	290	328	300	300	300
	10	-	385	480	400	400	400
	12	-	500	600	420	420	420
	16	-	-	750	450	450	450
	18	-	-	800	600	600	600
	20	-	-	880	700	700	700
8	8	-	380	420	380	380	380
	10	-	520	580	540	540	540
	12	-	-	640	550	550	550
	16	-	-	800	700	700	700
	18	-	-	900	750	750	750
10	8	-	450	590	500	500	500
	10	-	-	670	600	600	600
	12	-	-	780	700	700	700
	16	-	-	-	800	800	800
	18	-	-	-	900	900	900
12	8	-	500	630	550	550	550
	10	-	-	810	700	700	700
	12	-	-	900	800	800	800
	16	-	-	-	900	900	900
	18	-	-	-	-	1000	1000
16	8	-	-	710	660	660	660
	10	-	-	890	750	750	750
	12	-	-	-	900	900	900
	16	-	-	-	-	1000	1000
	18	-	-	-	-	-	1100
19	8	-	-	800	800	800	800
	10	-	-	-	900	900	900
	12	-	-	-	-	1000	1000
	16	-	-	-	-	-	1100

inlet pressure (bar)	Ød (mm)	Outlet pressure p2 (bar) 0,02	0,05	0,10	0,20	0,30	0,50
0,5	8	60	60	60	60	60	-
	10	75	90	100	90	90	-
	12	110	128	142	126	118	-
	16	120	168	204	160	140	-
	18	140	206	241	178	160	-
	20	180	210	270	200	170	-
1	8	90	90	110	90	90	90
	10	120	136	160	150	135	135
	12	147	172	200	180	160	160
	16	190	230	289	220	220	220
	18	200	260	366	270	235	235
	20	215	280	400	310	250	250
2	8	140	140	140	140	140	140
	10	167	195	231	195	195	195
	12	225	261	300	240	240	240
	16	290	340	390	310	310	310
	18	-	370	510	350	350	350
	20	-	370	564	380	380	380
3	8	190	190	190	190	190	190
	10	230	270	290	250	250	250
	12	-	310	400	300	300	300
	16	-	340	510	370	370	370
	18	-	400	630	410	410	410
	20	-	400	690	460	460	460
4	8	220	220	220	220	220	220
	10	-	360	360	300	300	300
	12	-	390	470	350	350	350
	16	-	400	600	430	430	430
	18	-	490	700	470	470	470
	20	-	-	760	520	520	520
5	8	240	260	280	260	260	260
	10	-	360	430	350	350	350
	12	-	454	560	385	385	385
	16	-	460	630	440	440	440
	18	-	520	690	560	560	560
	20	-	-	780	650	650	650
6	8	-	330	330	330	330	330
	10	-	420	480	400	400	400
	12	-	510	630	440	440	440
	16	-	-	760	470	500	500
	18	-	-	820	600	600	600
	20	-	-	900	710	710	710
8	8	-	400	420	380	380	380
	10	-	535	590	540	540	540
	12	-	-	660	580	580	580
	16	-	-	800	700	700	700
	18	-	-	900	750	750	750
10	8	-	500	650	600	600	600
	10	-	-	710	650	650	650
	12	-	-	800	700	700	700
	16	-	-	-	900	800	800
	18	-	-	-	1000	1000	1000
12	8	-	600	700	650	650	650
	10	-	-	850	956	750	750
	12	-	-	950	850	850	850
	16	-	-	-	1000	900	900
	18	-	-	-	-	1100	1100
16	8	-	-	750	700	700	700
	10	-	-	900	800	800	800
	12	-	-	-	950	950	950
	16	-	-	-	-	1100	1100
	18	-	-	-	-	-	1200
19	8	-	-	850	850	850	850
	10	-	-	-	1000	1000	1000
	12	-	-	-	-	1100	1100
	16	-	-	-	-	-	1300

Flow rates are given in Nm³/h for natural gas with density ρ = 0.78 kg/Nm³. For other gases, multiply table values by factor f = √(0.78/ρo), where ρo is gas density at t = 0 °C and p = 1.01325 bar. Factors for common gases: air 0.77, nitrogen 0.79, butane 0.53, propane 0.62.

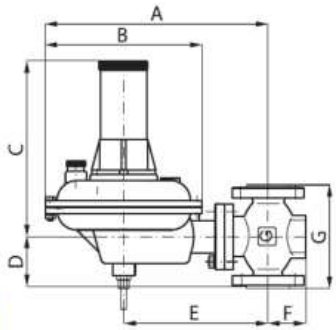

TYPE: 121

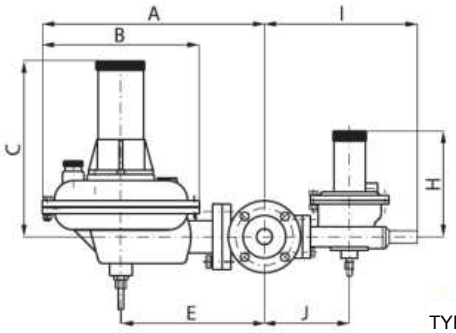

TYPE: 121-BV

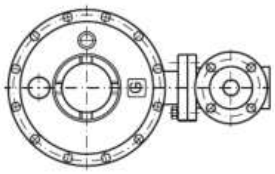

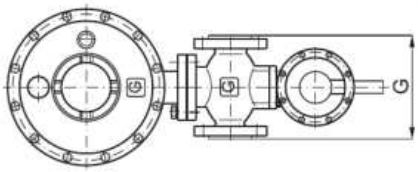

dimensions

PN16/25

SIZE / DN	A	B	C	D	E	F	G	H	I	J
	(mm)									
25	355	250	280	80	230	60	160	165	225	135
32	355	250	280	90	230	60	180	165	225	135
40	365	250	280	100	240	70	200	165	230	145
50	375	250	280	115	250	75	230	165	235	150

ACCURACY CLASSES

DN	p_2 (bar)	AC	SG
25 32	0,02÷0,1	10	20
40 50	0,1÷0,5	5	10

	p_{bl} (bar)	AG
VP	0,03÷1,0	2,5
NP	0,002÷0,3	5

Relief valve set pressure

pset = p2 + 30 mbar + 10%

Pressure regulators type 121 and type 121-BV comply with EN 334:2010. The manufacturer reserves the right to modify the design for product

improvement.

SERIES 120

pressure regulators

DIRECT-ACTING

LOW-PRESSURE REGULATORS

WITH SAFETY SHUT-OFF VALVE



Type: 122-BV

parameters

Inlet pressure: p1 = max. 12 bar

Outlet pressure: p2 = 0.01 ÷ 0.5 (1) bar

Sizes: DN25–DN50 PN16/25, ANSI150

climatic version: U and KhL (down to -60 °C)

application

natural gas, propane-butane

air, nitrogen and industrial gases

INSTALLATION AND PURPOSE

Pressure regulator type 122 is direct-acting and maintains stable outlet pressure p2 within accuracy class AC regardless of inlet pressure p1 and gas flow variations. Its breather valve protects the diaphragm against rupture during a sudden pressure rise and relieves the control line by throttling. Impulse line V1 supplies gas at pressure p2 to the control diaphragm mechanism, which balances the forces above and below the diaphragm and provides the preset outlet

pressure.

The regulator has an integral safety shut-off valve (SSV), tripping on both high and low outlet pressure. Impulse line V2 supplies gas to the SSV. A regulator with integral SSV is designated 122-BV. Use only with clean gas and install a filter upstream. The regulator may be installed horizontally or vertically. A G3/4" threaded port connects the breather-valve vent line for discharge outdoors. Standard installation is for left-to-right gas flow.

I inlet shut-off valve
filter
III pressure regulator type: 122-BV
IV safety valve
V vent valve

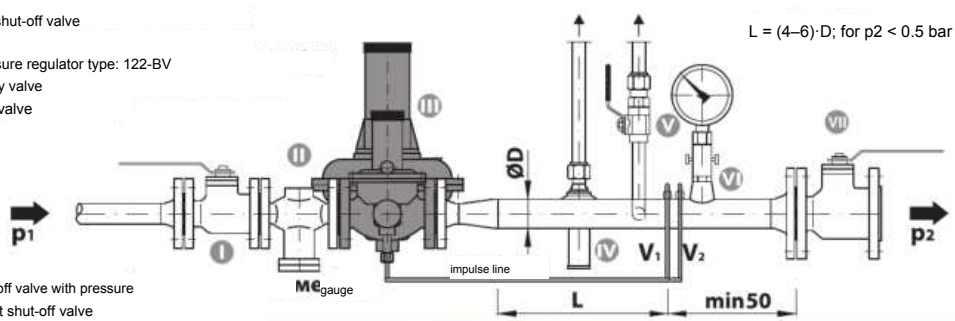

VI shut-off valve with pressure
VII outlet shut-off valve

Initially, when there is no gas in the pipeline, pressure regulator type 122-BV is open: under the action of spring 7 of the diaphragm mechanism, lever 5 and stem 4, plug 3 is lifted off

seat 2.

Gas at outlet pressure p2 enters the lower chamber, overcomes spring 7, moves diaphragm 6 and closes the regulator at preset p2. A rise in p2 closes it against the spring and p1 force on plug 3; a fall in p2 lets spring 7 open it through lever 5. The p2 deviation at closure corresponds to class SG. Downstream pressure controls opening and closing; the regulator maintains p2 within class AC. Spring 7 is set by adjuster 8. Balancing diaphragm 12 balances the force on the stem for smooth regulation.

SSV OPERATION

If pressure exceeds the permitted SSV trip setting, the SSV diaphragm mechanism moves upward, pulls lever 21 and releases latch tooth 18. Sleeve 17 and stem 16 are released, and stem spring 22 presses plug 14 onto seat 2. High-pressure tripping occurs against HP spring 24, set by HP adjusting nut 23. Low-outlet-pressure tripping is produced by LP spring 19, which moves the diaphragm mechanism downward; lever 21 releases the latch and trips the SSV. LP spring 19 is set by LP adjusting nut 20.

The SSV may be reset only manually, after determining and eliminating the cause of

tripping, as follows:

Unscrew reset handle 26 from SSV body 15, turn it over and screw it onto SSV stem 16. Pull handle 26 slowly and hold it for several seconds until pressure across the SSV equalizes. Then pull it fully; stem 16 must latch in the reset position. The SSV is reset. Unscrew handle 26, turn it over and screw it back into

body 15.

SSV reset

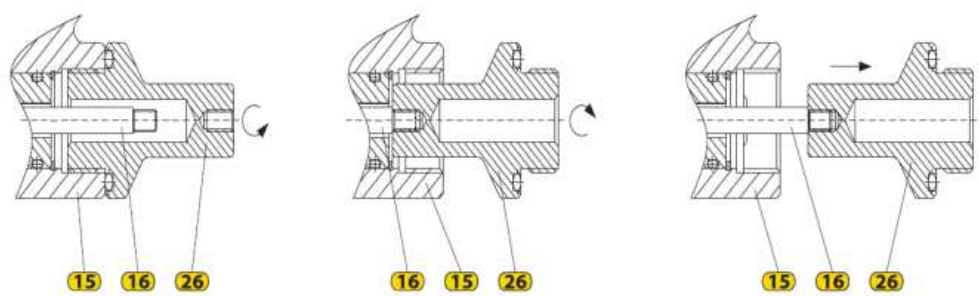

Item	Description	Material
	pressure regulator	
1.	regulator body	Steel 20L
2.	seat	Brass LS-58-3
3.	Seat disc	Brass LS-58-3
4.	stem	Steel 08Kh18N10
5.	lever	Steel 08; 08kp
6.	diaphragm	EFFBE
7.	spring	Spring steel wire
8.	Adjusting nut	Steel St3ps; St3sp
9.	Diaphragm body	Al alloy AK9ch
10.	Spring housing	Al alloy AK9ch
11.	Balancing diaphragm holder	Brass LS-58-3
12.	Balancing diaphragm	Effbe
13.	Body	
	SSV	
14.	Disc	Brass LS-58-3
15.	SSV body (lower)	Al alloy AK9ch
16.	Stem	Steel 08Kh18N10
17.	Sleeve	Bearing steel ShKh4
18.	Latch tooth	Steel 08; 08kp
19.	LP spring	Spring steel wire
20.	LP adjusting nut	Steel St3ps; St3sp
21.	lever	Steel 08; 08kp
22.	Stem spring	Spring steel wire
23.	HP adjusting nut	Steel St3ps; St3sp
24.	HP spring	Spring steel wire
25.	SSV body (upper)	Al alloy AK9ch
26.	Reset handle	Brass LS-58-3
27.	Stem extension	Brass LS-58-3

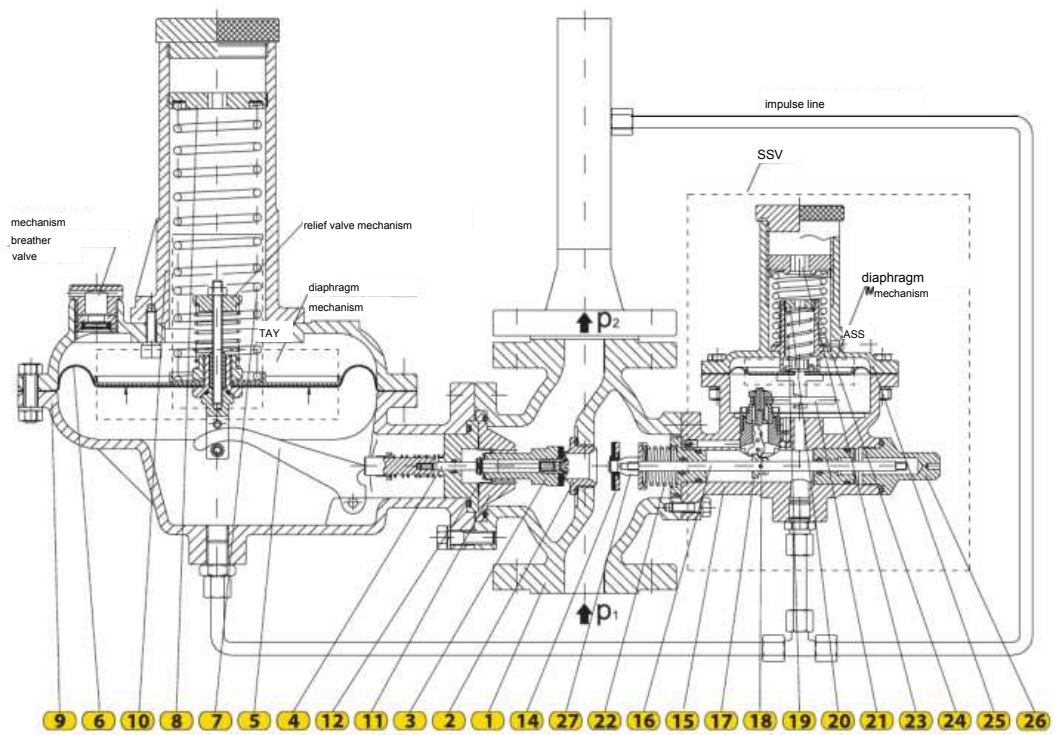

VM version, outlet pressure: p2 = 0.5–1 bar

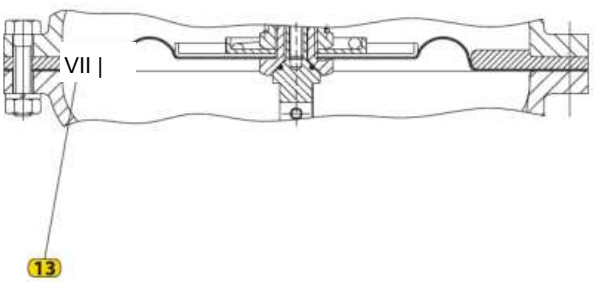

Pressure regulator type: 122-BV/

seat Ø18

DN25

inlet pressure (bar)	Outlet pressure P2 (mbar)										
	RG10 ZG20							RG5 ZG10			
	20	50	100	200	300	400	500	200	300	400	500
0,5	100	120	140	140	140	-	-	100	100	-	-
1	120	150	190	190	190	190	190	110	110	110	110
2	220	250	260	260	260	260	260	150	150	150	150
3	260	300	360	360	360	360	360	210	210	210	210
4	280	330	450	500	500	500	500	300	300	300	300
5	350	400	590	600	600	600	600	400	400	400	400
6	400	500	700	750	750	750	750	490	490	490	490
8	450	580	800	850	850	850	850	570	570	570	570
10	450	580	850	850	850	850	850	650	650	650	650
12	450	580	850	850	850	850	850	650	650	650	650

seat Ø18

DN32

inlet pressure (bar)	Outlet pressure P2 (mbar)										
	RG10 ZG20							RG5 ZG10			
	20	50	100	200	300	400	500	200	300	400	500
0,5	100	120	140	140	140	-	-	100	100	-	-
1	120	150	230	230	230	230	230	110	110	110	110
2	220	250	320	320	320	320	320	170	170	170	170
3	280	320	400	440	440	440	440	300	300	300	300
4	320	360	500	550	550	550	550	350	350	350	350
5	400	480	620	640	640	640	640	440	440	440	440
6	450	550	750	800	800	800	800	510	510	510	510
8	500	620	850	900	900	900	900	620	620	620	620
10	500	620	900	900	900	900	900	700	700	700	700
12	500	620	900	900	900	900	900	700	700	700	700

seat Ø24

DN32

inlet pressure (bar)	Outlet pressure p2 (mbar)										
	RG10 ZG20							RG5 ZG10			
	20	50	100	200	300	400	500	200	300	400	500
0,5	140	200	240	200	200	-	-	130	130	-	-
1	220	250	300	300	300	300	300	210	210	210	210
2	260	380	450	450	450	450	450	300	300	300	300
3	350	510	550	550	550	550	550	380	380	380	380
4	430	660	710	710	710	710	710	510	510	510	510
5	500	700	800	800	800	800	800	600	600	600	600
6	580	800	870	870	870	870	870	700	700	700	700
8	660	860	920	920	920	920	920	800	800	800	800
10	660	860	920	920	920	920	920	800	800	800	800
12	660	860	920	920	920	920	920	800	800	800	800

seat Ø24

DN40

inlet pressure (bar)	Outlet pressure p2 (mbar)										
	RG10 ZG20							RG5 ZG10			
	20	50	100	200	300	400	500	200	300	400	500
0,5	150	220	250	220	220	-	-	150	150	-	-
1	240	270	320	320	320	320	320	240	240	240	240
2	280	400	490	490	490	490	490	350	350	350	350
3	360	570	600	600	600	600	600	420	420	420	420
4	450	690	750	750	750	750	750	550	550	550	550
5	510	740	820	820	820	820	820	630	630	630	630
6	600	820	900	900	900	900	900	750	750	750	750
8	700	900	1050	1050	1050	1050	1050	860	860	860	860
10	700	900	1200	1200	1200	1200	1200	970	970	970	970
12	700	900	1200	1200	1200	1200	1200	1050	1050	1050	1050

seat Ø30

DN40

inlet pressure (bar)	Outlet pressure P2 (mbar)										
	RG10 ZG20							RG5 ZG10			
	20	50	100	200	300	400	500	200	300	400	500
0,5	170	320	320	320	290	-	-	180	180	-	-
1	200	400	500	470	470	470	470	300	300	300	300
2	290	610	700	700	700	700	700	450	450	450	450
3	380	800	900	900	900	900	900	590	590	590	590
4	460	1050	1200	1200	1200	1200	1200	680	680	680	680
5	600	1150	1300	1400	1400	1400	1400	750	750	750	750
6	730	1400	1500	1600	1600	1600	1600	830	830	830	830
8	1100	1650	1800	1800	2000	2000	2000	1100	1100	1100	1100
10	1450	1800	1800	1800	2000	2200	2300	1180	1180	1180	1180
12	1850	1800	1800	1800	2000	2200	2300	1290	1290	1290	1290

seat Ø30

DN50

inlet pressure (bar)	Outlet pressure P2 (mbar)										
	RG10 ZG20							RG5 ZG10			
	20	50	100	200	300	400	500	200	300	400	500
0,5	170	320	320	320	290	-	-	180	180	-	-
1	215	445	560	530	530	530	530	340	340	340	340
2	300	650	800	800	800	800	800	510	510	560	580
3	400	830	1000	1000	1000	1000	1000	640	640	680	700
4	500	1100	1300	1300	1300	1300	1300	740	740	800	850
5	650	1300	1500	1500	1500	1500	1500	835	835	950	1000
6	800	1500	1700	1700	1700	1700	1700	960	960	1050	1100
8	1200	1800	2200	2200	2200	2200	2200	1300	1300	1300	1300
10	1600	2150	2500	2500	2500	2500	2500	1500	1500	1500	1500
12	2200	2450	3000	3000	3000	3000	3000	1600	1600	1700	1820

Flow-rate values are given in Nm³/h and apply to natural gas with density ρ = 0.78 kg/Nm³.
For other gases, table flow rates may be corrected by factor $f = \sqrt{(0.6/d)}$. The correction factor (f) and relative density (d) for the most commonly used substances are given in the table.

SUBSTANCE	RELATIVE DENSITY (d)	CORRECTION FACTOR (f)
air	1	0.77
nitrogen	0.97	0.786
propane	1.57	0.62
butane	2,09	0.53
natural gas	0.6	1
CO_2	1.52	0.63

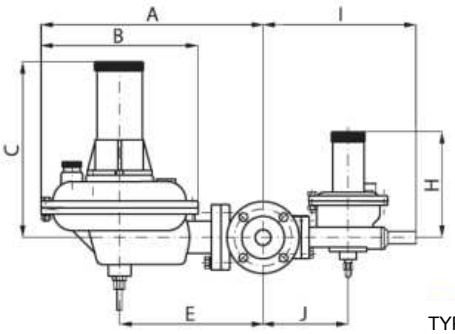

TYPE: 122-BV

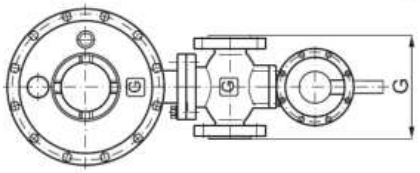

dimensions

PN16/25

SIZE / DN	A	B	C	E	G	H	I	J
	(mm)							
25	355	250	280	230	160	165	225	135
32	355	250	280	230	180	165	225	135
40	365	250	280	240	200	165	230	145
50	375	250	280	250	230	165	235	150

ACCURACY CLASSES

DN	p_2 (bar)	AC	SG
25 32 40 50	0,02÷0,5	10	20
		5	10

	p_{bl} (bar)	AG
VP	0,03÷1,0	2,5
NP	0,002÷0,3	5

Relief valve set pressure

Pov = p2 + 30 mbar + 10%

Pressure regulator type 122-BV complies with EN 334:2010. The manufacturer reserves the right to modify the design for its improvement.

SERIES
120

pressure regulators

DIRECT-ACTING

LOW-PRESSURE REGULATORS

WITH OR WITHOUT SAFETY SHUT-OFF VALVE



Type: 123

parameters :

Inlet pressure: p1 = max. 8 (12) bar

Outlet pressure: p2 = 0.01 ÷ 0.3bar

Sizes: DN40–DN50, PN16/25, ANSI 150

climatic version: U and KhL (down to -60 °C)



Type: 123-BV

application

natural gas, propane-butane

AIR, NITROGEN, TECH. GASES

installation and purpose

Pressure regulator type 123 is direct-acting and maintains p2 in class AC despite p1 and flow variations. Its breather valve protects the diaphragm during a surge and relieves the control line. Impulse lines supply gas at p2 to the diaphragm mechanism. Type 123-BV has an integral SSV, tripping on high pressure only or on both high and low pressure, as ordered. Use clean gas with an upstream filter. Mount horizontally or vertically. Port G3/4" connects the outdoor vent line. Standard flow is left to right.

I inlet shut-off valve
filter
III pressure regulator type: 123-BV
IV safety valve
V vent valve

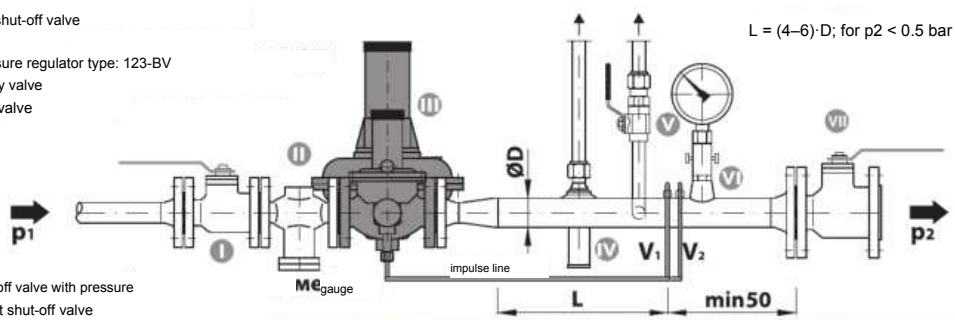

VI shut-off valve with pressure
VII outlet shut-off valve

Initially, when there is no gas in the pipeline, pressure regulator type 123-BV is open: under the action of diaphragm-mechanism spring 7, lever 5 and stem 4, valve disc 3 is lifted off

seat 2.

When gas is admitted, outlet pressure p2 enters the lower diaphragm chamber, overcomes spring 7, deflects diaphragm 6 and throttles the regulator to the p2 setpoint. If p2 rises, diaphragm force overcomes the spring and inlet-pressure p1 force on disc 3, closing the regulator; if p2 falls, spring 7 acts through lever 5 to reopen it. The p2 deviation at closing corresponds to lock-up class SG. The regulator maintains p2 within accuracy class AC. Spring 7 is set by spring adjuster 8.

SSV OPERATION

Above the SSV trip pressure, its diaphragm mechanism moves up, pulls lever 22 and releases locking tooth 15, sleeve 14 and stem 13; stem spring 19 then presses disc 11 onto seat 2. High-pressure tripping overcomes VP spring 18, set by VP adjusting nut 20. On low outlet pressure, NP spring 16 pushes the diaphragm down; via lever 22 it releases the latch and trips the SSV. NP spring 16 is set by NP adjusting nut 17.

The SSV may be reset only manually, after determining and eliminating the cause of

tripping, as follows:

Unscrew reset handle 23 from SSV body 13, reverse handle 23 and screw it onto SSV stem 13. Pull handle 23 slowly and hold it for several seconds until pressure across the SSV equalises. Then pull handle 23 fully; stem 13 must lock in the reset position. The SSV is reset. Unscrew handle 23, reverse it and screw it back into

body 12.

SSV reset

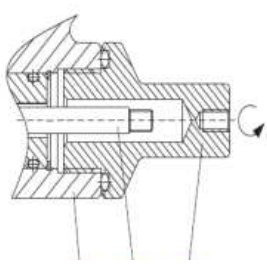

ad az @

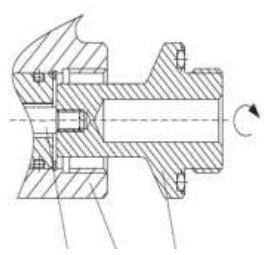

az a2 a

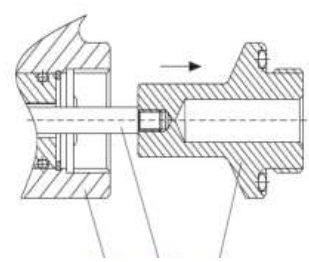

az az @e

Pos.	Description	Material	Pos.	Description	Material	Pos.	Description	Material
	pressure regulator		8.	Adjusting nut	Steel St3ps; St3sp	16.	LP spring	Spring steel wire
1.	regulator body	Steel 20L	9.	Diaphragm housing	Al alloy AK9ch	17.	LP adjusting nut	Steel St3ps; St3sp
2.	seat	Brass LS-58-3	10.	Spring housing	Al alloy AK9ch	18.	HP spring	Spring steel wire
3.	Seat disc	Brass LS-58-3		SSV		19.	Stem spring	Spring steel wire
4.	stem	Steel 08Kh18N10	11.	Valve disc	Brass LS-58-3	20.	HP adjusting nut	Steel St3ps; St3sp
5.	lever	Steel 08; 08kp	12.	SSV body	Al alloy AK9ch	21.	SSV body (upper)	Al alloy AK9ch
6.	diaphragm	Effbe	13.	Stem	Steel 08Kh18N10	22.	Lever	Steel 08; 08kp
7.	spring	Spring steel wire	14.	Lock sleeve	Steel	23.	Reset handle	Brass LS-58-3
			15.	Locking tooth	Steel	24.	Stem extension	Brass LS-58-3

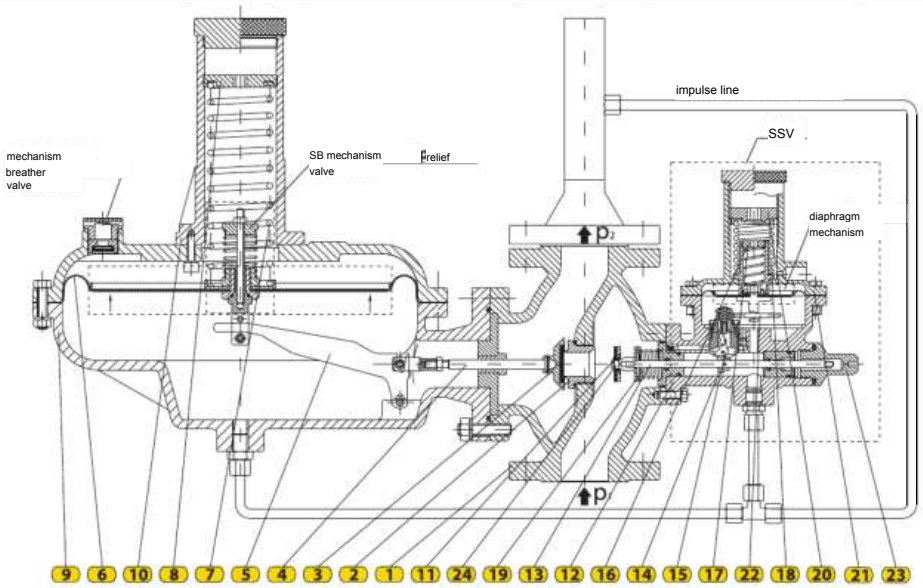

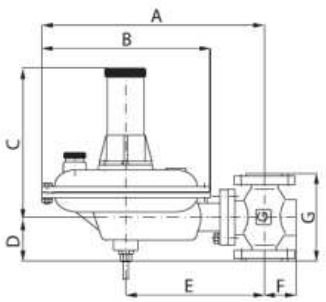

TYPE: 123

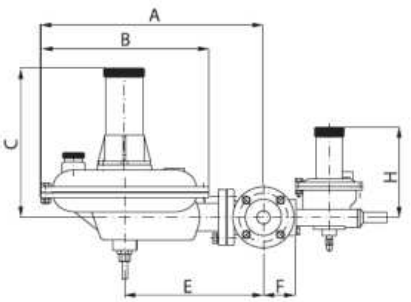

TYPE: 123-BV

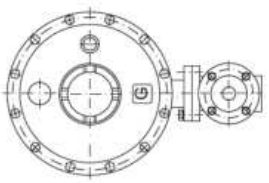

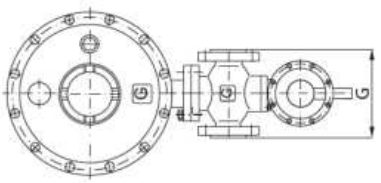

dimensions

PN16/25

DN \ SIZE	A	B	C	D	E	F	G	H	I	J
	(mm)									
40	465	350	295	100	290	65	200	165	230	145
50	465	350	295	115	300	75	230	165	235	150

ACCURACY CLASSES

DN	p2 (bar)	AC	SG
40	0,01÷0,1	10	20
50	0,1÷0,3	5	10

pbl (bar)		AG
VP	0,03÷1,0	2,5
NP	0,002÷0,3	5

Pressure regulator type: 123, 123-BV

P_1 (bar)	Ød (mm)	P1 (bar)					DN40
		0,01	0,02	0,05	0,10	0,20	0,30
0,1	12	60	70	60	-	-	-
	16	60	70	60	-	-	-
	18	70	80	70	-	-	-
	20	80	90	80	-	-	-
	25	90	100	90	-	-	-
0,2	12	70	80	80	90	-	-
	16	80	90	90	100	-	-
	18	90	100	100	110	-	-
	20	100	110	110	120	-	-
	25	110	120	120	130	-	-
0,5	12	90	120	130	130	110	110
	16	100	170	220	180	180	180
	18	120	180	240	230	190	190
	20	180	210	290	254	200	200
	25	190	230	340	280	210	210
1	12	190	190	220	220	157	157
	16	220	250	315	290	190	190
	18	240	264	380	361	250	250
	20	254	300	410	380	260	260
	25	296	335	500	435	280	280
2	12	230	290	300	300	270	250
	16	240	350	490	490	300	270
	18	270	360	600	560	370	290
	20	320	440	630	590	390	320
	25	-	460	650	610	480	360
3	10	245	280	280	296	260	220
	12	255	320	393	400	330	290
	16	270	410	620	620	340	330
	18	295	437	680	690	430	350
	20	-	500	750	750	440	410
	25	-	540	800	800	550	430
4	8	216	216	220	215	215	210
	10	245	320	350	360	290	250
	12	258	360	490	500	390	340
	16	400	440	640	690	420	370
	18	-	500	740	760	500	440
	20	-	600	760	800	600	480
	25	-	-	800	850	700	530
5	8	260	260	260	260	260	260
	10	270	340	430	440	336	300
	12	285	385	540	560	460	380
	16	-	500	700	760	480	420
	18	-	-	800	840	540	580
	20	-	-	830	890	630	650
	25	-	-	870	920	750	720
6	8	300	300	300	300	300	300
	10	340	370	500	520	400	370
	12	410	450	620	680	500	430
	16	-	-	740	810	600	510
	18	-	-	-	900	750	640
	20	-	-	-	980	800	790
8	8	380	380	380	380	380	380
	10	-	420	560	580	490	420
	12	-	510	640	700	610	460
	16	-	-	-	820	720	540
10	8	430	430	430	430	430	430
	10	-	500	680	760	640	580
	12	-	610	720	840	710	620
12	8	-	500	600	600	600	600
	10	-	740	820	900	900	900

(bar)	0,01	P2 (bar)					DN50
		0,02	0,05	0,10	0,20	0,30	
0,1	12	80	90	80	-	-	-
	16	80	90	80	-	-	-
	18	90	100	90	-	-	-
	20	100	110	100	-	-	-
	25	110	120	100	-	-	-
0,2	12	100	110	110	120	-	-
	16	110	120	120	130	-	-
	18	120	130	130	140	-	-
	20	130	140	140	150	-	-
	25	150	160	160	170	-	-
0,5	12	110	126	134	134	118	118
	16	120	174	222	186	186	186
	18	140	205	244	240	190	190
	20	190	210	296	270	200	200
	25	195	231	350	280	290	290
1	12	200	200	220	220	200	170
	16	239	256	366	320	210	210
	18	270	280	412	350	250	250
	20	280	310	439	390	260	260
	25	310	335	544	470	300	300
2	12	230	290	305	305	270	250
	16	240	352	522	480	300	280
	18	280	400	600	560	370	290
	20	320	460	655	590	390	320
	25	-	470	740	720	500	380
3	10	260	284	286	315	260	220
	12	265	320	402	400	330	290
	16	275	415	640	640	390	350
	18	310	530	740	740	466	380
	20	-	550	800	800	470	420
	25	-	620	840	840	600	500
4	8	220	220	220	230	215	210
	10	253	328	355	371	296	250
	12	270	371	502	510	390	340
	16	480	520	680	710	490	400
	18	-	560	790	810	570	470
	20	-	640	820	850	610	495
	25	-	-	840	890	715	560
5	8	260	260	260	260	260	260
	10	300	400	470	440	340	310
	12	320	450	550	580	480	380
	16	-	560	760	820	550	480
	18	-	-	850	890	600	560
	20	-	-	890	940	650	660
	25	-	-	920	960	790	750
6	8	320	320	320	320	320	320
	10	370	437	502	540	410	370
	12	410	500	640	700	540	460
	16	-	-	800	870	640	530
	18	-	-	-	940	780	620
	20	-	-	-	1050	850	800
8	8	400	400	400	400	400	400
	10	-	460	580	600	500	450
	12	-	570	700	760	640	480
	16	-	-	-	900	760	580
10	8	460	460	460	460	460	460
	10	-	550	750	800	670	600
	12	-	660	790	890	750	650
12	8	-	650	650	650	650	650
	10	-	780	850	950	950	950

Flow-rate values are given in Nm³/h and refer to natural gas with a relative density ρ = 0,78 kg/Nm³.

For other gases, the tabulated flow rates may be corrected using the factor $f = \sqrt{(0,6/d)}$. Correction factor (f) and relative density (d) for the most commonly used gases are given in the table.

SUBSTANCE	RELATIVE DENSITY (d)	CORRECTION FACTOR (f)
air	1	0.77
nitrogen	0.97	0.786
propane	1.57	0.62
butane	2,09	0.53
natural gas	0.6	1
CO_2	1.52	0.63

Pressure regulators type 123 and type 123-BV comply with EN 334:2010

The manufacturer reserves the right to modify the design in order to improvement.

SERIES
120

pressure regulators

DIRECT-ACTING

LOW-PRESSURE REGULATORS

WITH OR WITHOUT SAFETY SHUT-OFF VALVE



Type: 124

parameters :

Inlet pressure: p1 = max. 8 (12) bar

Outlet pressure: p2 = 0.01 ÷ 0.3bar

Sizes: DN40–DN50, PN16/25, ANSI 150

climatic version: U and KhL (down to -60 °C)



Type: 124-BV 4

application

natural gas, propane-butane

AIR, NITROGEN, TECH. GASES

installation and purpose

Pressure regulator type 124/124-BV is direct-acting and maintains p2 within accuracy class AC despite p1 and flow changes. Its vent valve protects the diaphragm during pressure surges. Impulse line V1 supplies p2 to the diaphragm mechanism. Type 124-BV has a built-in SSV that trips on overpressure (-V) or over- and underpressure (-V/NP). Use clean gas and an upstream filter. Install horizontally or vertically. Connect the vent line to port G3/4". Standard flow is left to right.

I inlet shut-off valve
filter
III pressure regulator type: 124-BV
IV safety valve
V vent valve

L = (4–6)·D; for p2 < 0.5 bar

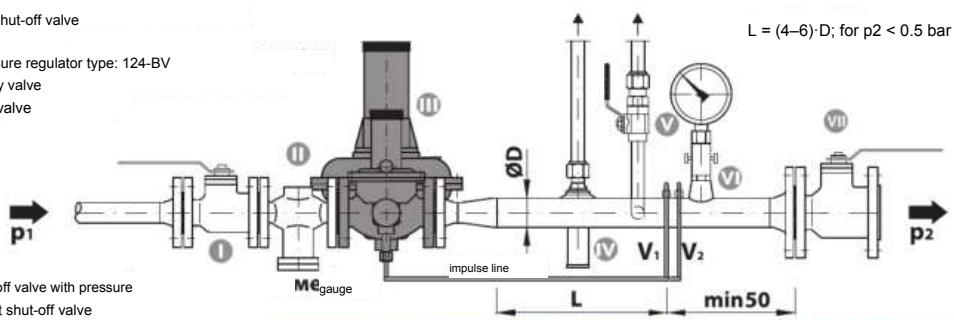

VI shut-off valve with pressure
VII outlet shut-off valve

operation

Initially, when there is no gas in the pipeline, pressure regulator type 124-BV is open: under the action of diaphragm-mechanism spring 7, lever 5 and stem 4, valve disc 3 is lifted off

seat 2.

When gas is admitted, outlet pressure p2 enters the lower diaphragm chamber, overcomes spring 7, deflects diaphragm 6 and throttles the regulator to the p2 setpoint. If p2 rises, the force under the diaphragm overcomes the spring and inlet-pressure p1 force on disc 3, closing the regulator; if p2 falls, spring 7 acts through lever 5 to reopen it to the p2 setpoint. The p2 deviation at closing corresponds to lock-up class SG. Outlet-line pressure controls opening and closing; the main function is to maintain

constant outlet pressure p2 within accuracy class AC. Spring 7 is adjusted by spring adjuster 8. This regulator has balancing diaphragm 12, which balances the pressure force on the stem and ensures smooth control.

SSV OPERATION

Above the SSV trip pressure, its diaphragm mechanism moves up, pulls lever 21 and releases locking tooth 18, sleeve 17 and stem 16; stem spring 22 then presses disc 14 onto seat 2. High-pressure tripping overcomes VP spring 23, set by VP adjusting nut 24. On low outlet pressure, NP spring 19 pushes the diaphragm down; via lever 21 it releases the latch and trips the SSV. NP spring 19 is set by NP adjusting nut 20.

The SSV may only be reset manually, after identifying the cause of its trip and

tripping, as follows:

Unscrew reset handle 26 from SSV body 15, reverse it and screw it onto SSV stem 16. Pull handle 26 slowly and hold it for several seconds until pressure across the SSV equalises. Then pull handle 26 fully; stem 16 must lock in the reset position. The SSV is reset. Unscrew handle 26, reverse it and screw it back into

body 15.

SSV reset

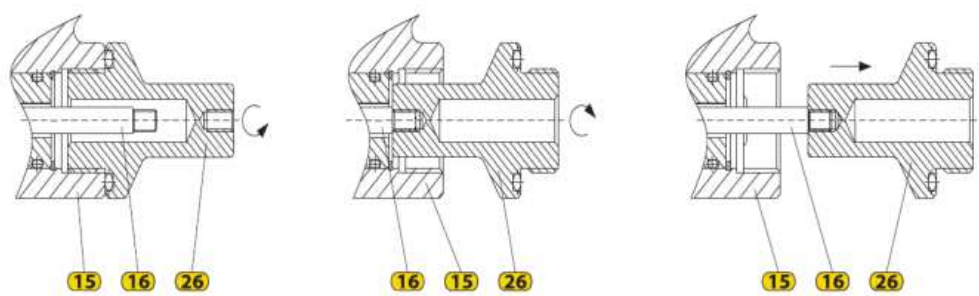

materials

Pos.	Description	material	Pos.	Description	material	Pos.	Description	material
	pressure regulator		9.	Diaphragm housing	Al alloy AK9ch		18/lock tooth	Steel 20Kh13
			10.	spring housing	Al alloy AK9ch		19. LP spring	Spring steel wire
1.	regulator body	Steel 20L		1. Balancing diaphragm holder	Brass LS-58-3		20. LP adjusting nut	Steel St3ps; St3sp
2.	seat	Brass LS-58-3		2. Balancing diaphragm	EFFBE		21. Lever	Steel 08; 08kp
3.	Seat disc	Brass LS-58-3	13.	spring	Spring steel wire		22. Stem spring	Spring steel wire
4.	stem	Steel 08Kh18N10	SSV				23. HP spring	Spring steel wire
5.	lever	Steel 08; 08kp		14. Disc	Brass LS-58-3		24. HP adjusting nut	Steel St3ps; St3sp
6.	diaphragm	Effbe		15. SSV body (lower)	Al alloy AK9ch		25. SSV body (upper)	Al alloy AK9ch
7.	spring	Spring steel wire		16. Stem	Steel 08Kh18N10		26. Reset handle	Brass LS-58-3
8.	Adjusting nut	Steel St3ps; St3sp		17. Sleeve	Steel 08Kh18N10		27. Stem extension	Brass LS-58-3

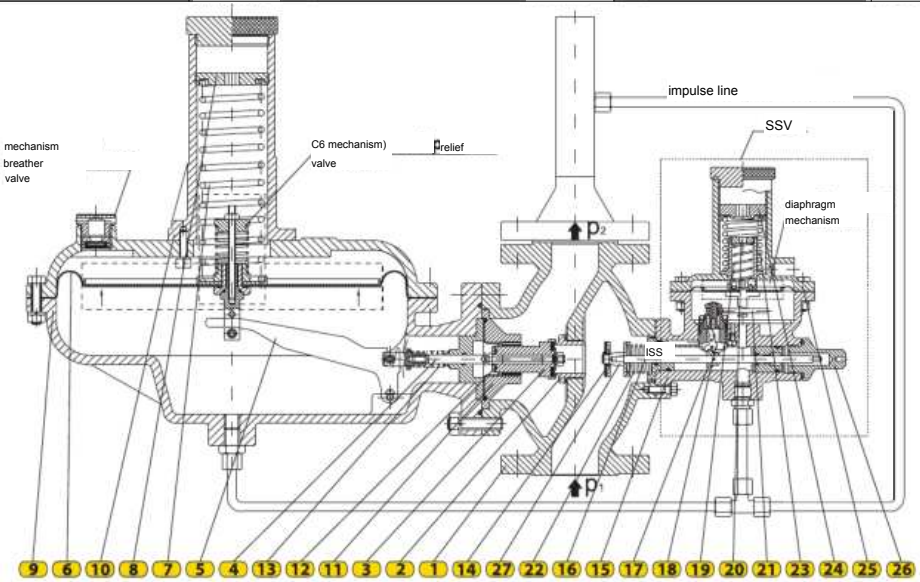

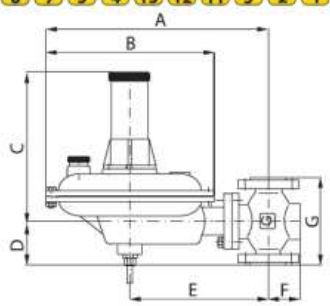

TYPE: 124

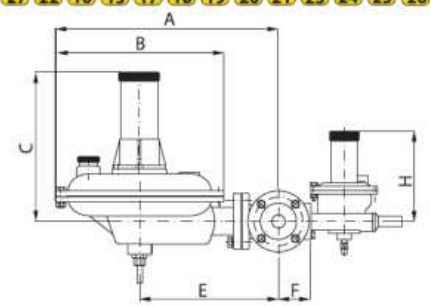

TYPE: 124-BV

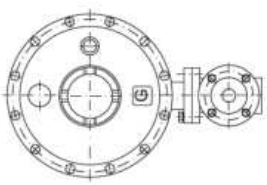

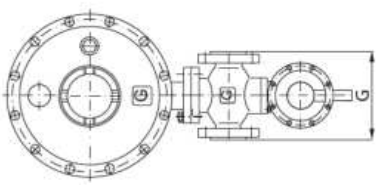

dimensions

PN16

SIZE / DN	A	B	C	D	E	F	G	H	I	J
	(mm)									
40	465	350	295	100	290	65	200	165	230	145
50	465	350	295	115	300	75	230	165	235	150

flow tables

Pressure regulator type: 124, 124-BV

seat Ø24

DN40

inlet pressure (bar)	Outlet pressure P2 (mbar)					
	10	20	50	100	200	300
0,1	90	100	90	-	-	-
0,2	100	110	120	120	-	-
0,5	160	206	250	270	230	230
1	190	268	360	370	240	240
2	210	430	510	560	340	340
3	240	510	750	770	480	480
4	260	560	810	840	580	580
5	300	600	860	900	750	750
6	350	700	900	1000	950	950
8	400	800	950	1150	1100	1100
10	400	800	950	1150	1100	1100
12	400	800	950	1150	1100	1100

seat Ø30

DN50

inlet pressure (bar)	Outlet pressure p2 (mbar)					
	10	20	50	100	200	300
0,1	110	130	110	-	-	-
0,2	130	140	175	175	-	-
0,5	200	220	285	290	240	240
1	230	338	450	470	360	360
2	290	485	670	800	460	460
3	320	620	800	840	520	520
4	350	660	900	950	640	640
5	380	740	980	1050	920	920
6	400	820	1050	1150	1100	1100
8	450	950	1050	1250	1200	1200
10	450	950	1050	1250	1200	1200
12	450	950	1050	1250	1200	1200

seat Ø30

DN40

inlet pressure (bar)	Outlet pressure p2 (mbar)					
	10	20	50	100	200	300
0,1	100	120	110	-	-	-
0,2	120	130	168	168	-	-
0,5	180	220	285	290	240	240
1	240	310	430	440	340	340
2	270	480	660	793	450	450
3	800	600	800	840	520	520
4	330	650	880	900	600	600
5	350	720	950	1000	900	900
6	390	800	1000	1100	1050	1050
8	440	900	1000	1200	1150	1150
10	440	900	1000	1200	1150	1150
12	440	900	1000	1200	1150	1100

Flow-rate values are given in Nm³/h and refer to natural gas with a relative density ρ = 0,78 kg/Nm³.

For other gases, the tabulated flow rates may be corrected using the factor f = √(0,6/d). Correction factor (f) and relative density (d) for the most commonly used gases are given in the table.

SUBSTANCE	RELATIVE DENSITY (d)	CORRECTION FACTOR (f)
air	1	0.77
nitrogen	0.97	0.786
propane	1.57	0.62
butane	2,09	0.53
natural gas	0.6	1
CO_2	1.52	0.63

ACCURACY CLASSES

DN	p2 (bar)	AC	SG
40	0,01÷0,1	10	20
50	0,1÷0,3	5	10

	pы (bar)	AG
VP	0,03÷1,0	2,5
NP	0,002÷0,3	5

Relief valve set pressure

Pov = p2 + 30 mbar + 10%

Pressure regulators type 124 and type 124-BV comply with EN 334:2010. The manufacturer reserves the right to modify the design for improvement.

SERIES
120

pressure regulators

DIRECT-ACTING



Type: 125



Type: 125-BV

HIGH-PRESSURE REGULATORS

WITH OR WITHOUT SAFETY SHUT-OFF VALVE

parameters

Inlet pressure: p1 = max. 19 (100) bar

Outlet pressure: p2 = 0,3 + 6 (16) bar

Sizes: DN25 - DN50 PN16/25, ANSI150+600

climatic version: U and KhL (down to -60 °C)

application

natural gas, propane-butane

air, nitrogen and industrial gases

INSTALLATION AND PURPOSE

Pressure regulator type 125 is direct-acting and maintains outlet pressure p2 within accuracy class AC despite inlet-pressure p1 and flow changes. Impulse line V1 supplies p2 to the control diaphragm mechanism. Type 125-BV has an integral safety shut-off valve (SSV), tripping on high or low outlet pressure; impulse line V2 supplies the SSV. Use clean gas and an upstream filter. Install horizontally or vertically. Standard flow direction is left to right.

I inlet shut-off valve
filter
III Pressure regulator type: 125-BV
IV safety valve
V vent valve

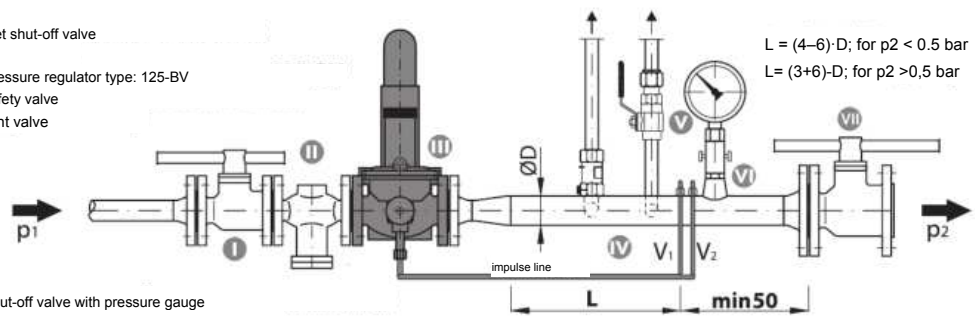

L = (4–6)·D; for p2 < 0.5 bar
L= (3+6)-D; for p2 >0,5 bar

VI Shut-off valve with pressure gauge
VII outlet shut-off valve

operation

Initially, when there is no gas in the pipeline, pressure regulator type 125 is open: under the action of diaphragm-mechanism spring 7, lever 5 and stem 4, valve disc 3 is lifted off

seat 2.

When gas is admitted, outlet pressure p2 enters the lower diaphragm chamber, overcomes spring 7, deflects diaphragm 6 and throttles the regulator to the p2 setpoint. If p2 rises, diaphragm force overcomes the spring and inlet-pressure p1 force on disc 3, closing the regulator; if p2 falls, spring 7 acts through lever 5 to reopen it. The p2 deviation at closing corresponds to lock-up class SG. The regulator maintains constant p2 within accuracy class AC. Spring 7 is set by adjuster 8.

SSV OPERATION

Above the SSV trip pressure, its diaphragm mechanism moves up, pulls lever 17 and releases locking tooth 14, sleeve 13 and stem 12; stem spring 22 then presses disc 10 onto seat 2. High-pressure tripping overcomes HP spring 15, set by HP adjusting nut 16. On low outlet pressure, LP spring 18 pushes the diaphragm down; via lever 17 it releases the latch and trips the SSV. LP spring 18 is set by LP adjusting nut 19.

The SSV may be reset manually only, after determining the cause of the trip

and correcting it, as follows:

Unscrew reset handle 21 from SSV body 11, reverse it and screw it onto stem 12. Pull handle 21 slowly and hold it for several seconds until pressure across the SSV equalises. Then pull handle 21 fully; stem 12 must lock in the reset position. The SSV is reset. Unscrew handle 21, reverse it and screw it back into

body 11.

SSV reset

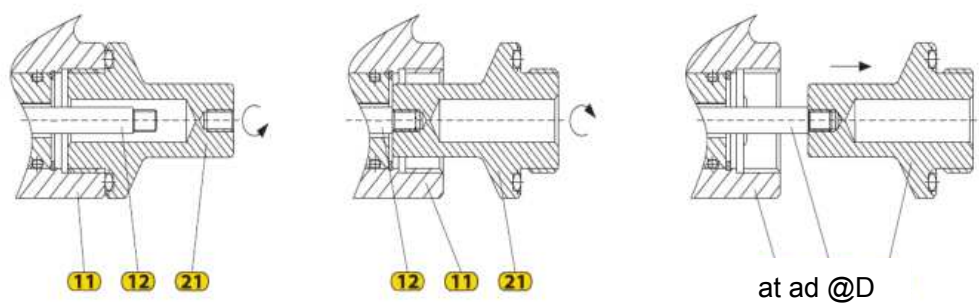

at ad @D

Pos.	Description	Material	8. Adjusting nut	steel ст3пс;ст3сп	16. HP adjusting nut	steel ст3пс;ст3сп
	pressure regulator		9. Diaphragm housing	steel 08; 08kp	17. Lever	Сталь 08; 08кп
1.	regulator body	Steel 20L	ПЗК		18. Пружина НП	Spring steel Wire
2.	seat	Латунь ЛС-58-3	10. Disc	brass ЛС-58-3	19. LP adjusting nut	steel ст3пс;ст3сп
3.	Seat disc	Латунь ЛС-58-3	11. SSV body (lower)	Steel 20L	20. SSV body (upper)	Steel 20/1
4.	stem	steel 08Х18Н10	12. Stem	steel 08Х18Н10	21. Reset handle	Латунь ЛС-58-3
5.	lever	steel 08; 08kp	13. Lock sleeve	steel 08Х18Н10	22. Stem spring	Spring steel wire
6.	diaphragm	Effbe	14. Locking tooth	steel 20КН13	23. Stem extension	brass ЛС-58-3
7.	spring	Spring steel wire	15. HP spring	Spring steel Wire		

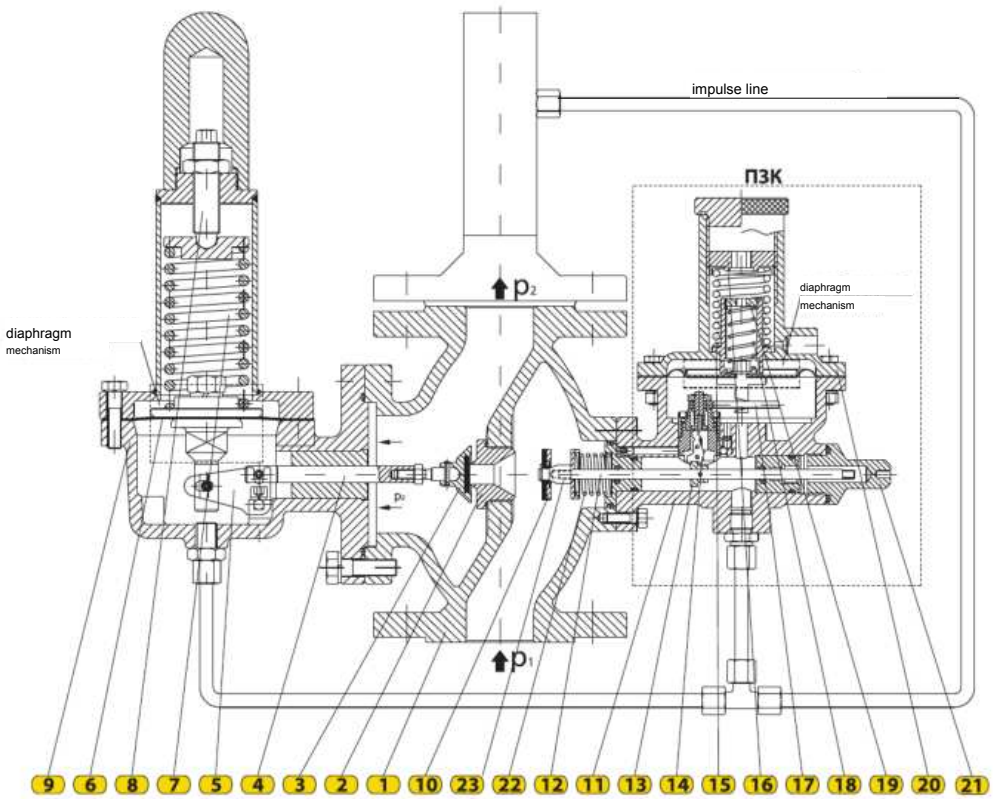

Pressure regulator type: 125, 125-BV

DN25

p1 (bar)	Ød (mm)	p2 (bar) 0,5	1	2	4	6	8	10	16
1	3	10	-	-	-	-	-	-	-
	5	20	-	-	-	-	-	-	-
	6	30	-	-	-	-	-	-	-
	8	45	-	-	-	-	-	-	-
	10	60	-	-	-	-	-	-	-
	12	70	-	-	-	-	-	-	-
2	3	15	15	-	-	-	-	-	-
	5	35	35	-	-	-	-	-	-
	6	65	60	-	-	-	-	-	-
	8	85	75	-	-	-	-	-	-
	10	110	102	-	-	-	-	-	-
	12	140	130	-	-	-	-	-	-
4	3	30	30	28	-	-	-	-	-
	5	65	65	60	-	-	-	-	-
	6	115	115	105	-	-	-	-	-
	8	160	160	150	-	-	-	-	-
	10	215	215	205	-	-	-	-	-
	12	260	260	250	-	-	-	-	-
6	3	40	40	40	37	-	-	-	-
	5	95	95	95	86	-	-	-	-
	6	155	155	155	140	-	-	-	-
	8	230	230	230	210	-	-	-	-
	10	305	305	305	295	-	-	-	-
	12	375	375	375	365	-	-	-	-
8	3	45	45	45	40	35	-	-	-
	5	115	115	115	110	105	-	-	-
	6	195	195	195	176	159	-	-	-
	8	285	285	285	274	263	-	-	-
	10	380	380	380	365	348	-	-	-
10	3	60	60	60	60	53	48	-	-
	5	135	135	135	135	125	110	-	-
	6	220	220	220	220	200	180	-	-
	8	315	315	315	315	300	270	-	-
	10	478	478	478	478	430	400	-	-
12	3	71	71	71	71	71	60	55	-
	5	160	160	160	160	160	145	130	-
	6	275	275	275	275	275	260	240	-
	8	405	405	405	405	405	395	380	-
	10	545	545	545	545	545	525	500	-
16,7	3	92	92	92	92	92	92	80	-
	5	225	225	225	225	225	225	200	-
	6	350	350	350	350	350	350	320	-
	8	505	505	505	505	505	490	475	-
	10	695	695	695	695	695	695	675	-
19	3	125	125	125	125	125	125	115	105
	5	280	280	280	280	280	280	265	260
	6	465	465	465	465	465	465	450	440
	8	635	635	635	635	635	635	625	615
25	3	140	140	140	140	140	140	140	130
	5	505	505	505	505	505	505	500	485
	6	555	555	555	555	555	555	530	510
	8	795	795	795	795	795	795	780	740
30	3	-	175	175	175	175	175	190	175
	5	-	405	405	405	405	405	405	385
	6	-	715	715	715	715	715	715	715
40	3	-	205	205	205	205	205	200	180
	5	-	505	505	505	505	505	500	490
	6	-	905	905	905	905	905	900	895
50	3	-	295	295	295	295	295	295	290
	5	-	635	635	635	635	635	635	630
63	3	-	355	355	355	355	355	355	350
	5	-	805	805	805	805	805	805	795
80	3	-	-	-	445	445	445	445	435
100	3	-	-	-	55	555	555	555	550

DN32

p1 (bar)	Ød (mm)	p2 (bar) 0,5	1	2	4	6	8	10	16
1	3	12	-	-	-	-	-	-	-
	5	23	-	-	-	-	-	-	-
	6	35	-	-	-	-	-	-	-
	8	54	-	-	-	-	-	-	-
	10	67	-	-	-	-	-	-	-
	12	79	-	-	-	-	-	-	-
2	3	20	20	-	-	-	-	-	-
	5	43	43	-	-	-	-	-	-
	6	71	64	-	-	-	-	-	-
	8	92	81	-	-	-	-	-	-
	10	115	108	-	-	-	-	-	-
	12	151	138	-	-	-	-	-	-
4	3	39	39	31	-	-	-	-	-
	5	74	74	64	-	-	-	-	-
	6	121	121	109	-	-	-	-	-
	8	174	174	156	-	-	-	-	-
	10	220	220	209	-	-	-	-	-
	12	268	268	255	-	-	-	-	-
6	3	50	50	50	41	-	-	-	-
	5	105	105	105	94	-	-	-	-
	6	164	164	164	145	-	-	-	-
	8	241	241	241	215	-	-	-	-
	10	315	315	315	300	-	-	-	-
	12	384	384	384	370	-	-	-	-
8	3	51	51	51	45	38	-	-	-
	5	121	121	121	115	109	-	-	-
	6	204	204	204	181	162	-	-	-
	8	295	295	295	280	270	-	-	-
	10	391	391	391	370	353	-	-	-
10	3	66	66	66	66	57	51	-	-
	5	144	144	144	144	132	115	-	-
	6	221	221	221	221	208	187	-	-
	8	327	327	327	327	311	280	-	-
	10	491	491	491	491	440	408	-	-
12	3	76	76	76	76	76	65	59	-
	5	169	169	169	169	169	151	134	-
	6	285	285	285	285	285	264	242	-
	8	417	417	417	417	417	401	385	-
	10	557	557	557	557	557	533	505	-
16,7	3	97	97	97	97	97	97	83	-
	5	232	232	232	232	232	232	205	-
	6	361	361	361	361	361	361	323	-
	8	517	517	517	517	517	497	480	-
	10	708	708	708	708	708	708	680	-
19	3	129	129	129	129	129	129	118	107
	5	288	288	288	288	288	288	270	264
	6	476	476	476	476	476	476	456	444
	8	648	648	648	648	648	648	630	619
25	3	145	145	145	145	145	145	145	132
	5	512	512	512	512	512	512	507	490
	6	566	566	566	566	566	566	537	515
	8	812	812	812	812	812	812	787	745
30	3	-	180	180	180	180	180	193	176
	5	-	412	412	412	412	412	412	390
	6	-	727	727	727	727	727	723	720
40	3	-	210	210	210	210	210	203	182
	5	-	512	512	512	512	512	504	493
	6	-	917	917	917	917	917	907	900
50	3	-	303	303	303	303	303	303	295
	5	-	640	640	640	640	640	640	633
63	3	-	360	360	360	360	360	360	352
	5	-	814	814	814	814	814	814	800
80	3	-	-	-	451	451	451	451	438
100	3	-	-	-	562	562	562	562	554

DN40

p1 (bar)	Ød (mm)	p2 (bar) 0,5	1	2	4	6	8	10	16
1	3	15	-	-	-	-	-	-	-
	5	25	-	-	-	-	-	-	-
	6	38	-	-	-	-	-	-	-
	8	59	-	-	-	-	-	-	-
	10	75	-	-	-	-	-	-	-
	12	89	-	-	-	-	-	-	-
2	3	25	25	-	-	-	-	-	-
	5	49	49	-	-	-	-	-	-
	6	80	75	-	-	-	-	-	-
	8	103	92	-	-	-	-	-	-
	10	129	102	-	-	-	-	-	-
	12	170	150	-	-	-	-	-	-
4	3	45	45	41	-	-	-	-	-
	5	85	85	74	-	-	-	-	-
	6	135	135	120	-	-	-	-	-
	8	190	190	180	-	-	-	-	-
	10	240	240	228	-	-	-	-	-
	12	290	290	270	-	-	-	-	-
6	3	58	58	58	50	-	-	-	-
	5	115	115	115	100	-	-	-	-
	6	176	176	176	160	-	-	-	-
	8	256	256	256	235	-	-	-	-
	10	340	340	340	320	-	-	-	-
	12	405	405	405	385	-	-	-	-
8	3	65	65	65	53	47	-	-	-
	5	133	133	133	125	118	-	-	-
	6	220	220	220	195	183	-	-	-
	8	320	320	320	300	290	-	-	-
	10	425	425	425	405	398	-	-	-
10	3	78	78	78	78	65	62	-	-
	5	159	159	159	159	140	125	-	-
	6	241	241	241	241	220	200	-	-
	8	350	350	350	350	331	305	-	-
	10	530	530	530	530	495	448	-	-
12	3	89	89	89	89	89	74	67	-
	5	183	183	183	183	183	165	149	-
	6	315	315	315	315	315	281	265	-
	8	445	445	445	445	445	421	405	-
	10	589	589	589	589	589	561	529	-
16,7	3	105	105	105	105	105	105	89	-
	5	249	249	249	249	249	249	215	-
	6	390	390	390	390	390	390	355	-
	8	545	545	545	545	545	515	500	-
	10	755	755	755	755	755	755	730	-
19	3	138	138	138	138	138	138	125	115
	5	305	305	305	305	305	305	290	282
	6	505	505	505	505	505	505	482	471
	8	690	690	690	690	690	690	671	640

Flow rates are given in Nm³/h and refer to natural gas of relative density ρ = 0,78 kg/Nm³.

For other gases, the tabulated flow rates may be corrected using the factor f = √(0,6/d). Correction factor (f) and relative density (d) for the most commonly used gases is given in the table.

SUBSTANCE	RELATIVE DENSITY (d)	CORRECTION FACTOR (f)
air	1	0.77
nitrogen	0.97	0.786
propane	1.57	0.62
butane	2,09	0.53
natural gas	0.6	1
CO_2	1.52	0.63

ACCURACY CLASSES

DN	p2 (bar)	AC	SG
25 32	0,3÷1,0	10	20
40	1,0÷16,0	5	10

TYPE: 125

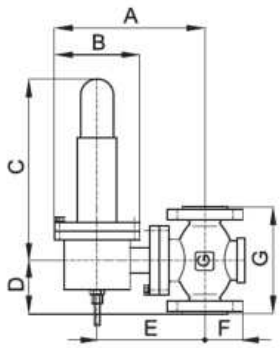

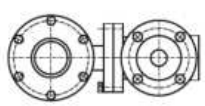

TYPE: 125-BV

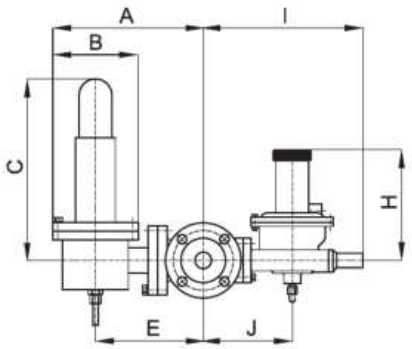

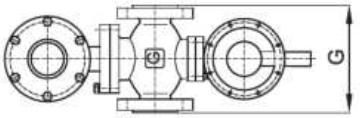

dimensions

PN16/25

SIZE / DN	A	B	C	D	E	F	G	H	I	J
	(mm)									
25	230	130	235	80	165	60	160	165	190	135
32	230	130	235	90	165	70	180	165	190	135
40	240	130	280	100	165	75	200	165	220	145
50	250	130	280	115	185	85	230	165	235	150

ANSI300/600

размер / DN	ANSI	A	B	C	D	E	F	G	H	I
		(mm)								
25	300	230	130	240	100	165	92	197	/	303
	600	230	130	240	105	166	92	210	/	303
40	300	240	130	240	120	175	105	235	/	315
	600	240	130	240	125	175	105	251	/	315
50	300	252	130	240	135	190	115	267	/	326
	600	252	130	240	145	190	115	286	/	326

Pressure regulators type 125 and type 125-BV comply with EN 334:2010. The manufacturer reserves the right to modify the design for its improvement.

SERIES
120

pressure regulators
DIRECT-ACTING

HIGH-PRESSURE REGULATORS
БЕЗ WITH SAFETY SHUT-OFF VALVE

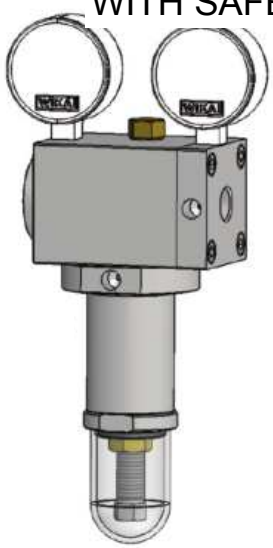

Type: 126-Junior

parameters

Inlet pressure: p1 = max. 250 bar

Outlet pressure: p2 = 2 + 50 bar

Sizes: G1/2"

Moving nozzle: Ø7,5

Pressure class: PN100/250; ANSI600/900/1500

application

Compressed natural gas (CNG)

natural gas

Nitrogen (N□)

Carbon dioxide (CO□)

and industrial gases

installation and purpose

Pressure regulator type 126-Junior is a direct-acting regulator that maintains constant outlet pressure (p2) within regulation class (RG), regardless of changes in flow rate and inlet pressure (p1). The regulator is designed for high up to 100 bar and 250 bar (CNG); gas at up to 60 °C and 90 °C. Inlet and outlet connections are threaded. At pressures up to 250 bar, a safety valve is installed. The regulator is also available with an integral safety shut-off device.

Type: 126-Junior + SSV

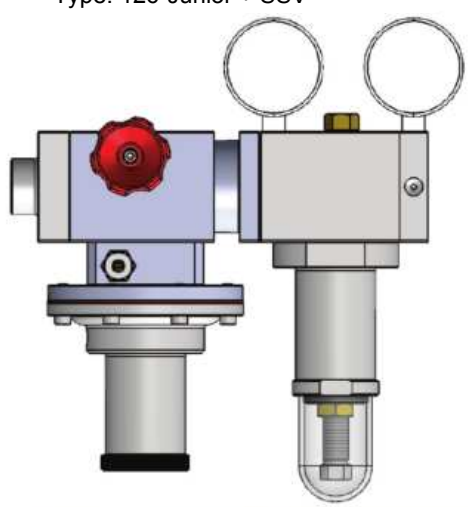

diagram

Поз.	НАЗВАНИЕ ЧАСТИ
	GAS PRESSURE REGULATOR
1.	regulator body
2.	Nozzle
3.	diaphragm
4.	spring housing
5.	Regulator seat
6.	Seal
7.	Outlet connection
8.	Adjusting screw
9.	spring
10.	Pressure gauge

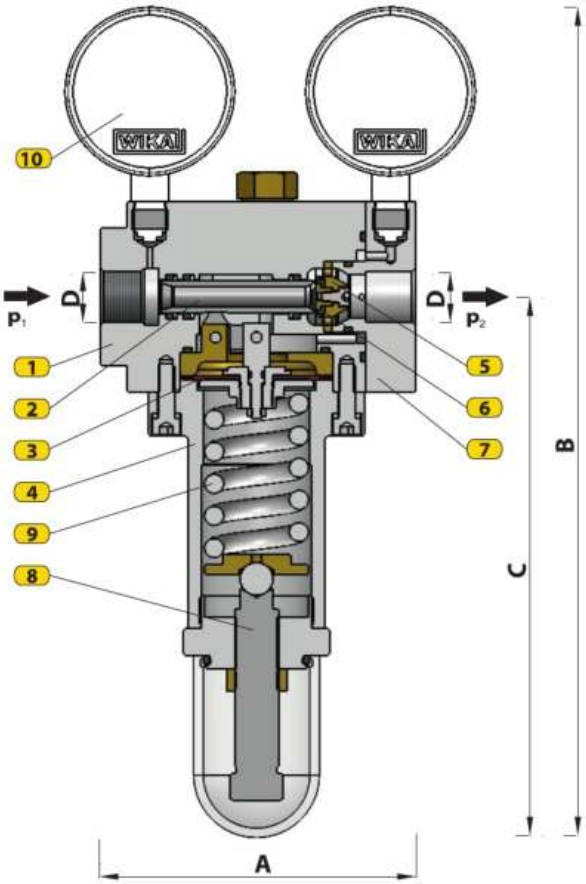

dimensions

Тип SIZE (mm)	A	B	C	D
126-junior	115	305	199	G1/2"
126-junior+ПЗК	262	305	199	G1/2"

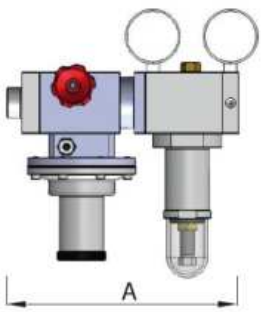

operation

Initially, with no gas in the pipeline, axial outlet-pressure regulator type 126-Junior is open: spring (9) moves the diaphragm assembly and movable nozzle (2) away from regulator seat (5), fully opening the regulator. Gas pressure through the impulse port acts on the diaphragm underside, overcomes spring (9), and retracts nozzle (2) to control the set pressure. Rising outlet/impulse pressure closes the regulator; when pressure stabilizes and falls, it reopens. Adjust spring (9) with the adjusting screw.

FLOW TABLE

Вход. давл. p_1 (бар)	Выход. давл. p_2 (бар)		
	3	6	8
8,5	210	180	100
12	240	440	380
20	300	550	620
29	350	580	730

Note:
The table lists the laboratory test results. Since the device is new, the table has not yet been completed for the full range of inlet and outlet values.

Axial pressure regulators type 126-Junior comply with the requirements of SRPS EN 334. The manufacturer reserves the right to make changes to the product technical data to improve production.

SERIES 120

pressure regulators

DIRECT-ACTING

DIRECT-ACTING AXIAL HIGH-PRESSURE REGULATORS

DIRECT-ACTING (threaded and flanged)



Type: 126-AX-NP

parameters

Inlet pressure: p1 = max 100 bar

Outlet pressure: p2 = 0.15–3 bar (126-AX-NP)

p2 = 1–16 (30) bar (126-AX-VP)

Sizes: DN25; DN40; DN50

3/4"; 1"; 6/4"; 2" (NPT)

Movable nozzles: Ø13, Ø19, Ø25

Pressure class: PN16/25, ANSI150/300/600

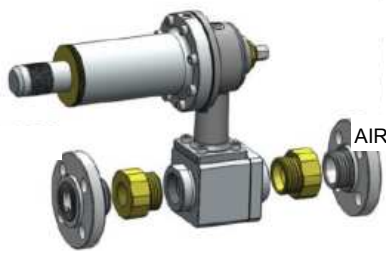

Type: 126-AX-VP

application

natural gas, propane-butane

AIR, NITROGEN AND INDUSTRIAL GASES

installation and purpose

Type 126-AX maintains p2 in RG regardless of flow/p1 for natural gas, LPG, air, N□ and industrial gases. p2 provides diaphragm control pressure via external/internal impulse (Fig. 1). The balanced nozzle improves control and KG. Rotate the assembly 180° (Fig. 2) for inlet-pressure control with a relief/safety valve. Outlet control fails open; inlet control fails closed. Monitor control is available (Fig. 3). Mount in any position; keep upstream piping clean.

was clean.

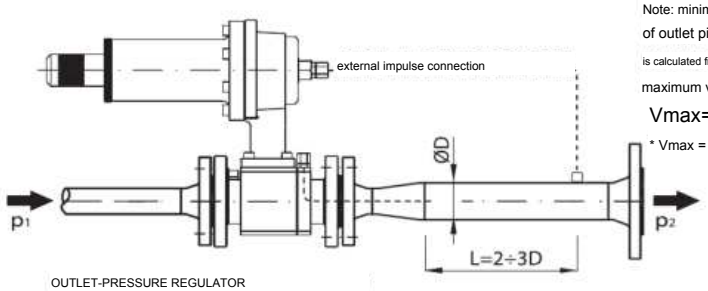

Note: minimum diameter of outlet pipe OD is calculated from the maximum velocity Vmax=25m/s; p2<1bar

* Vmax = 40 m/s for p2 >1 bar

OUTLET-PRESSURE REGULATOR

Figure 1.

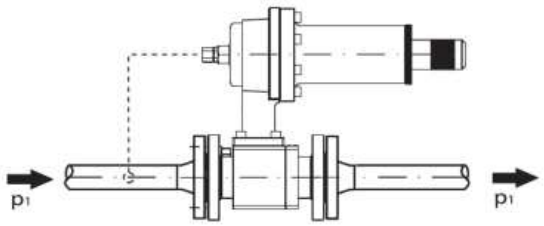

INLET-PRESSURE REGULATOR WITH RELIEF AND SAFETY VALVE (actuator assembly rotated 180°)

Figure 2.

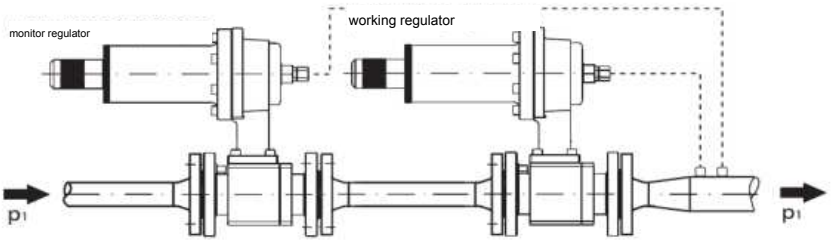

MONITOR REGULATION

Figure 3.

operation

Initially, outlet regulator 126-AX (Figs. 1, 4) is open: spring (14) moves lever (8), which drives nozzle (5) along fixed stem (21) and shaft (20) away from two-sided seat (6). Impulse pressure under the diaphragm overcomes spring (14) and moves lever (8)/nozzle (5) to control pressure. A sharp rise closes it; a stabilized pressure drop reopens it. Screw (16) sets spring force. Initially, the inlet regulator (Fig. 2) is closed; impulse pressure overcomes the spring and opens it.

the regulator when pressure drops.

diagram

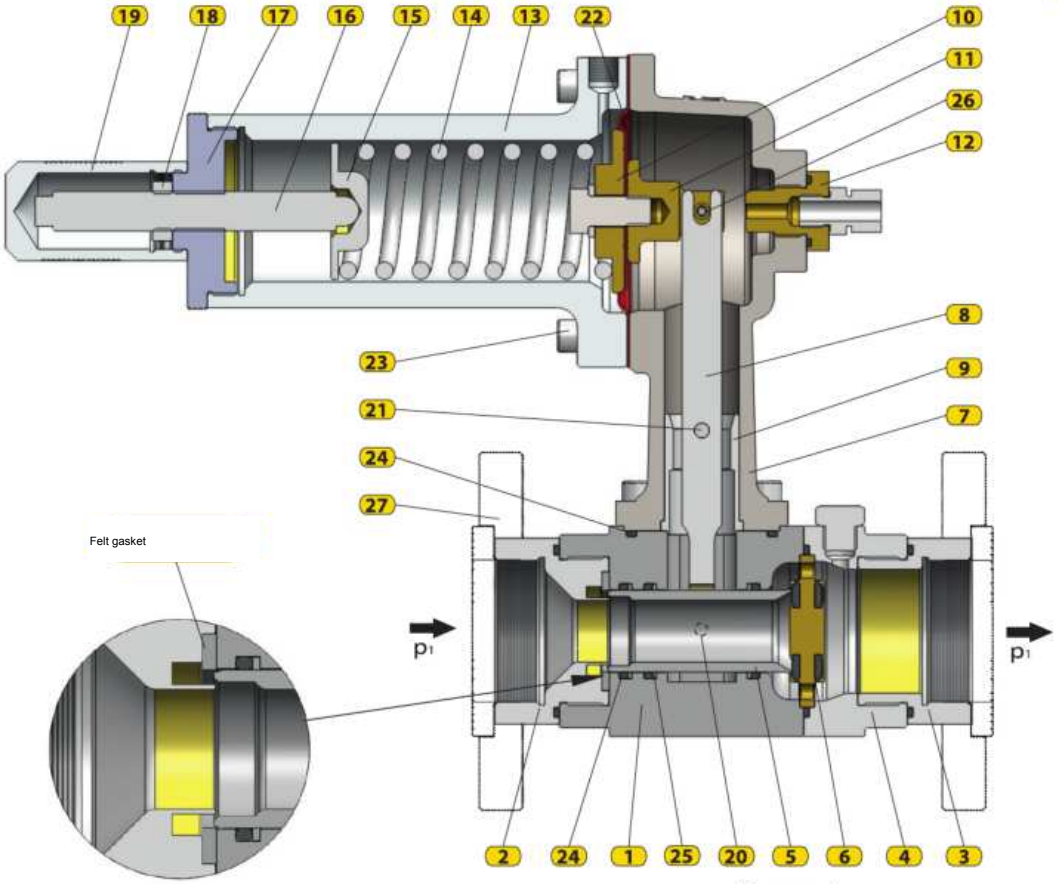

Figure 4.

Pos. Description	POS. | DESCRIPTION		Item	description
1.	regulator body	10.	Spring seat	19. cover
2.	Threaded inlet connection	11.	Diaphragm chamber	20. Shaft
3.	Threaded outlet connection	12.	Plug	21. Lever pivot
4.	Outlet flange	13.	spring housing	22. diaphragm
5.	Movable nozzle	14.	spring	23. Screw
6.	Two-sided seat	15.	Retaining plate	24. O-ring
7.	Diaphragm housing	16.	Adjusting screw	25. Retaining ring
8.	lever	17.	Adjusting-screw cap	26. Spring pin
9.	Coupling	18.	Nut	27. Mating flange

DIAGRAM

Axial regulator 126-AX (Fig. 4) comes with threaded (2) and flanged connections (27); materials and dimensions depend on pressure class. Up to 25 bar, the body is aluminium alloy; above 25 bar, steel. The movable nozzle has two O-rings up to 25 bar and three O-rings for ANSI300/ANSI600. Seat (6) is symmetric: if one sealing side is damaged, rotate the assembly 180° and use the other side. Each regulator contains felt

gaskets.

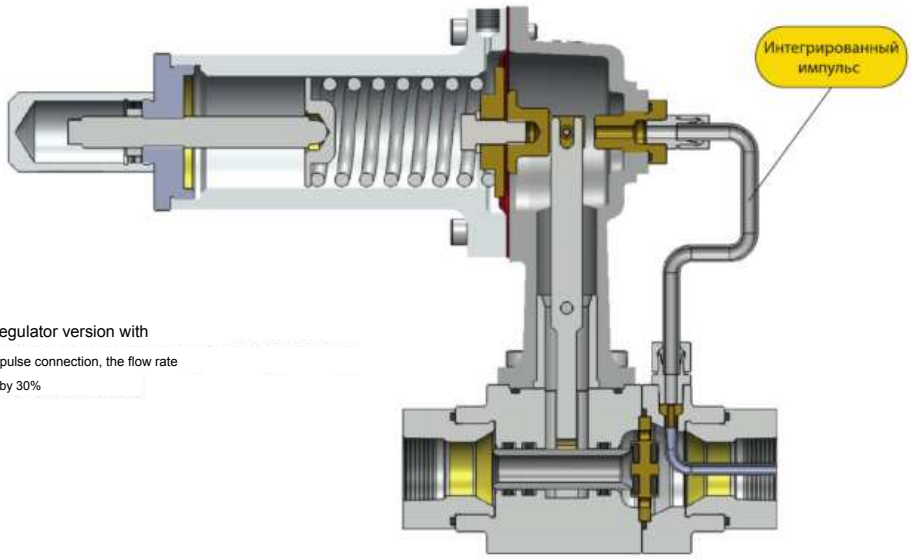

Note:

- In the regulator version with integral impulse connection, the flow rate is reduced by 30%

Spring table for 126-AX-NP (Piz = 0.15–3 bar)

Piz (bar)	Stiffness
0,15÷0,3	Ø5,5x18,3x55x150
0,25÷0,45	Ø6x17,6x55x150
0,35÷0,75	Ø6,5x18,7x55x150
0,4÷0,9	Ø7x19,9x55x150
0,6÷1,2	Ø8x18,4x55x150
0,9÷3	Ø9,6x17,5x55x150

Spring table for 126-AX-VP (Piz = 1–16 bar)

Piz (bar)	Stiffness
0,9÷1,5	Ø5,5x18,3x55x150
1÷2,5	Ø6x17,6x55x150
1,8÷3,5	Ø6,5x18,7x55x150
3÷4,2	Ø7x19,9x55x150
3,5÷6,5	Ø8x18,4x55x150
6÷12	Ø9,6x17,5x55x150
9÷16	Ø10x18x55x150

Spring table for 126-AX-VP/R (Piz = 12–30 bar)

Piz (bar)	Stiffness
12÷24	Ø9,6x17,5x55x150
18÷28	Ø10x18x55x150
22÷30	Ø11x17,8x55x150

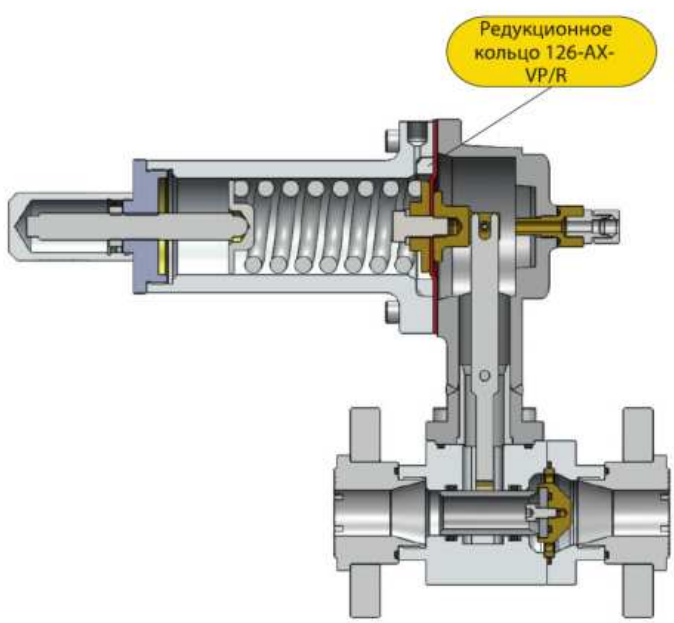

DN	G	KG [m³/h·bar]
25	3/4"/1"	225
40/50	6/4"	450
40/50	6/4"/2"	750

FLOW RATE CALCULATION

Regulator sizing is based on inlet pressure (p1), outlet pressure (p2), and required flow Qmax.

p1 [bar] – inlet pressure (gauge)
p2 [bar] – outlet pressure (gauge)
Qmax [Nm³/h] – natural-gas flow rate

1. $\frac{p2+1}{p1+1} \geq 0{,}5$

$$KG = \frac{Qmax}{\sqrt{(p2+1)(p1-p2)}}$$

2. $\frac{p2+1}{p1+1} < 0{,}5$

$$KG = \frac{2Qmax}{p1+1}$$

Using the calculated KG, select the regulator size with the next higher KG value in the table. Ensure that gas velocity at the regulator outlet flange does not exceed 180 m/s.

Flow rates are given in Nm³/h and apply to natural gas with density ρ = 0.78 kg/Nm³. For other gases, the table flow rates may be corrected by factor f = √(0.6/d). The correction factor (f) and relative density (d) for the most commonly used substances are given in the table.

SUBSTANCE	RELATIVE DENSITY (d)	CORRECTION FACTOR (f)
air	1	0.77
nitrogen	0.97	0.786
propane	1.57	0.62
butane	2,09	0.53
natural gas	0.6	1
CO_2	1.52	0.63

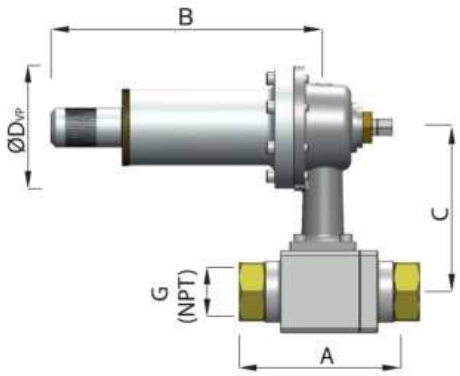

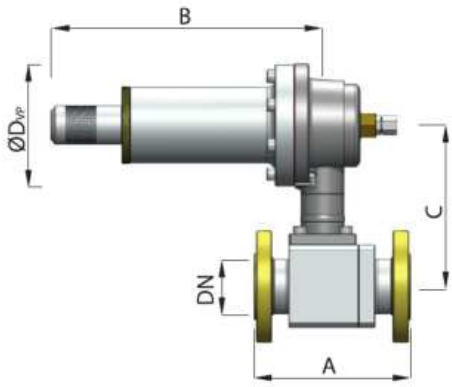

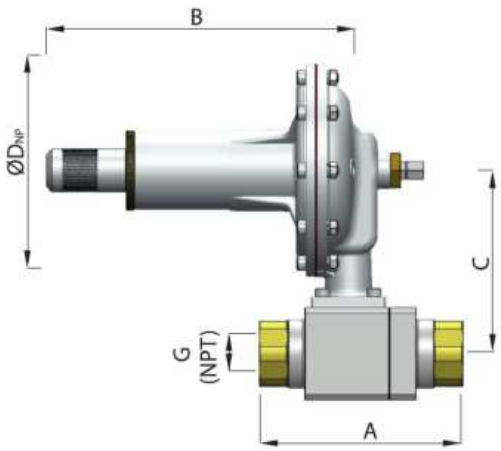

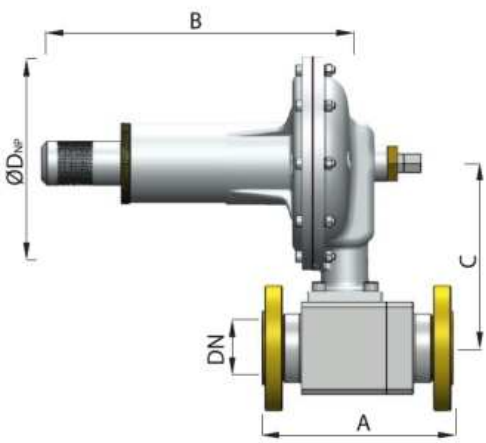

SIZE (mm)	DN	25	40	50
A	PN16/25	160	200	230
	ANSI150	184	222	254
	ANSI300	197	235	267
	ANSI600	210	251	286
B	all cl.	277	277	277
C		170	175	175
ØDne		196	196	196
ØDVP		126	126	126

SIZE (mm)	G(NPT)	3/4"	1"	6/4"	2"
A	PN16/25	160	160	160	168
	ANSI150	160	160	160	168
	ANSI300	187	187	187	195
	ANSI600	187	187	187	195
B	all cl.	277	277	277	277
C		170	170	115	115
ØDvye		196	196	196	196
ØDVP		126	126	126	126

Axial pressure regulators type 126-AX comply with SRPS EN 334. Axial pressure regulators type 126-AX are protected by the Federal Institute of Intellectual

Property.

The manufacturer reserves the right to change the product technical data in order to improve

production

SERIES 120

pressure regulators
DIRECT-ACTING

LOW-PRESSURE REGULATORS
WITH SAFETY SHUT-OFF VALVE

Type: 127-BV



parameters

Inlet pressure: p1 = max 4 (12) bar

Outlet pressure: p2 = 0.01–0.5 bar

Sizes: DN40–DN100 PN16, ANSI150

climatic version: U and KhL (down to -60 °C)

application

natural gas, propane-butane

air, nitrogen and industrial gases

installation and purpose

Direct-acting regulator 127-BV maintains p2 within accuracy class AC regardless of p1 and flow. Its breather valve protects the diaphragm during a pressure surge. Impulse lines deliver p2 to the diaphragm actuator. An integral SSV is fitted; options trip on overpressure only (-V) or on over/underpressure (-VNP). Use clean gas and install an upstream filter. Mount horizontally or vertically. Thread R3/4" accepts a vent line discharging outdoors. Standard flow direction is left to right.

I inlet shut-off valve
filter
III pressure regulator type: 127-BV
IV safety valve
V vent valve

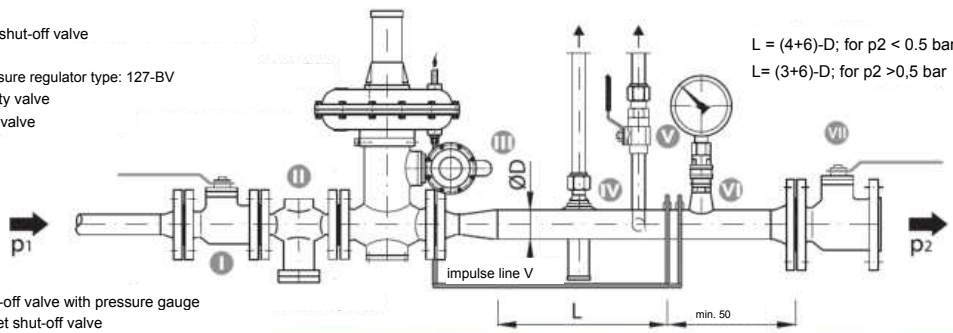

L = (4+6)-D; for p2 < 0.5 bar
L= (3+6)-D; for p2 >0,5 bar

VI shut-off valve with pressure gauge
VII outlet shut-off valve

Initially, without gas, regulator 127-BV is open: spring 13 acts through the diaphragm mechanism and stem 3, lifting disc 4 off seat 2. Gas at p2 enters the lower chamber, overcomes spring 7, moves diaphragm plate 11 and closes the regulator to preset p2. Rising p2 closes it further; closure deviation is class SG. Downstream pressure controls opening and closing and is held within class AC. Spring 13 is set by adjuster 8. Balancing diaphragm 12 balances stem force for smooth regulation.

SSV OPERATION, REGULATORS DN40–DN80

Above the SSV trip setting, its diaphragm mechanism rises, pulls lever 25 and releases latch tooth 21. Sleeve 17 and stem 16 are released; stem spring 22 presses plug 14 onto seat 2. High-pressure tripping acts against HP spring 23, set by HP nut 18. Low-pressure tripping is produced by LP spring 19, which moves the diaphragm mechanism down; lever 25 releases the latch and trips the SSV. LP spring 19 is set by LP nut 20. Reset the SSV only manually after finding and eliminating the trip cause,

as follows:

Unscrew reset handle 24 from SSV body 15, turn it over and screw it onto SSV stem 16. Slowly pull handle 24 and hold it for several seconds until SSV pressure equalizes. Then pull handle 24 fully; stem 16 must latch in the reset position. The SSV is reset. Unscrew handle 24, turn it over and screw it back into body 15.

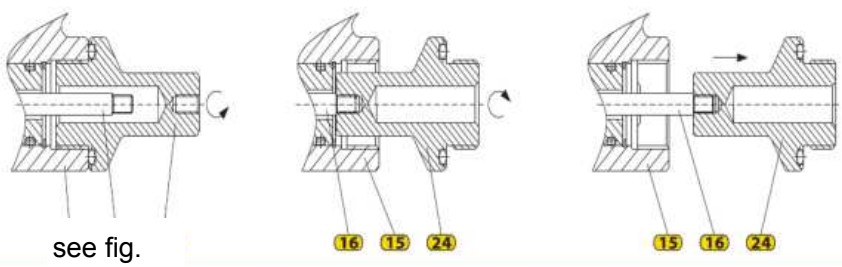

see fig.

SSV OPERATION, REGULATOR DN100

Gas at p2 reaches the SSV pilot via the impulse line. If p2 is too high, pressure on diaphragm (a) overcomes spring (b), moving pilot stem (c); pusher (d) acts on gear (e). Gear (e) turns, balls (f) enter the groove and spring-loaded stem (g) presses plug (h) onto the seat, stopping gas. If p2 is too low, spring (i) moves diaphragm (a) and stem (c); pusher (d) acts on gear (e), balls (f) enter the groove and stem (g) presses plug (h) onto the seat. Reset the SSV manually after eliminating the cause.

as follows:

– close the inlet and outlet shut-off valves of the pressure-reducing line;

– turn the SSV reset wheel slightly counterclockwise to equalize pressure, then turn it fully (the SSV stem must latch);

– slowly open the pressure-reducing line inlet valve.

Item	Name	Material | 9
	pressure regulator	
1.	Regulator body	Steel 20L
2.	Seat	Aluminium
3.	stem	Steel 08Kh18N10
4.	Plate	Алюминий
5.	Guide tube	Steel 08Х18Н10
6.	Bal. diaphragm holder	Алюминий
7.	spring housing	Steel 20L
8.	Spring adjuster	Steel St3ps; St3sp
	body upper	
10.	diaphragm lower	Steel 20L
11.	Diaphragm plate	Steel ст3пс;ст3сп
12.	Balancing diaphragm	ЕРПМ
13.	spring	Spring steel wire
	SSV	
14.	valve disc	Латунь ЛС-58-3
15.	SSV body	Al alloy AK9ch
16.	stem	Steel 08Kh18N10
17.	Sleeve	Сталь 08Х18Н10
18.	HP adjusting nut	Steel St3ps; St3sp
19.	LP spring	Spring steel wire
20.	LP adjusting nut	Steel St3ps; St3sp
	Latch tooth	Steel 20Kh13
22.	spring	Spring steel wire
23.	HP spring	Spring steel wire
24.	Reset handle	Латунь ЛС-58-3
25.	lever	Steel 08; 08кп
26.	spring housing	Алюм. сплав АК9ч
27.	Stem extension	Brass LS-58-3

SSV DN40–80

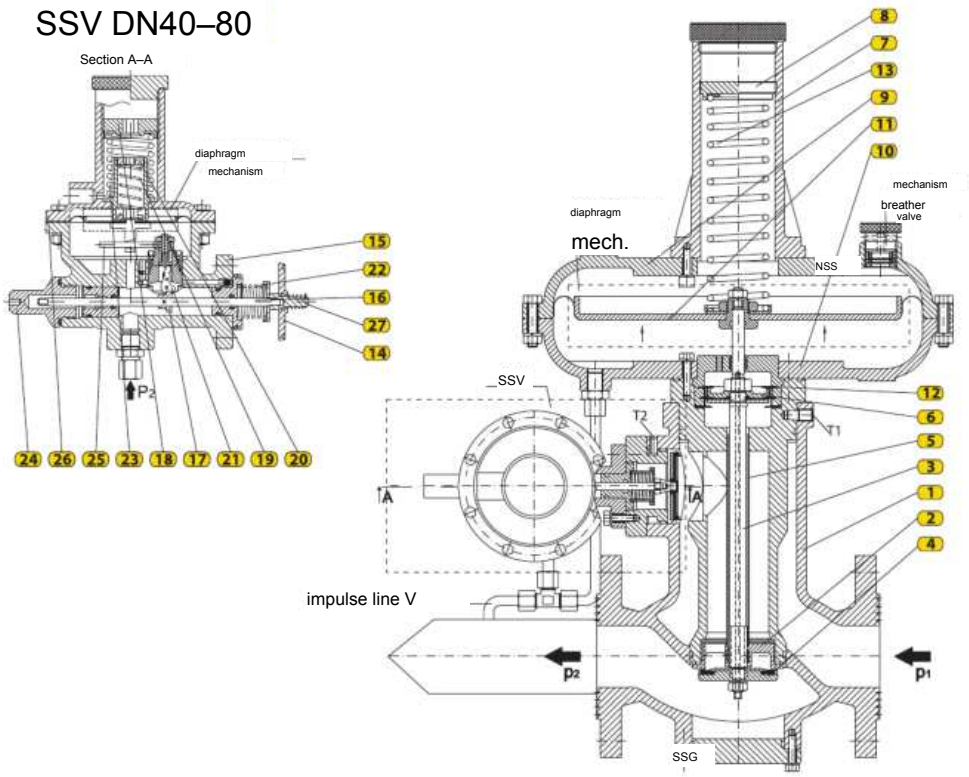

SSV for DN100

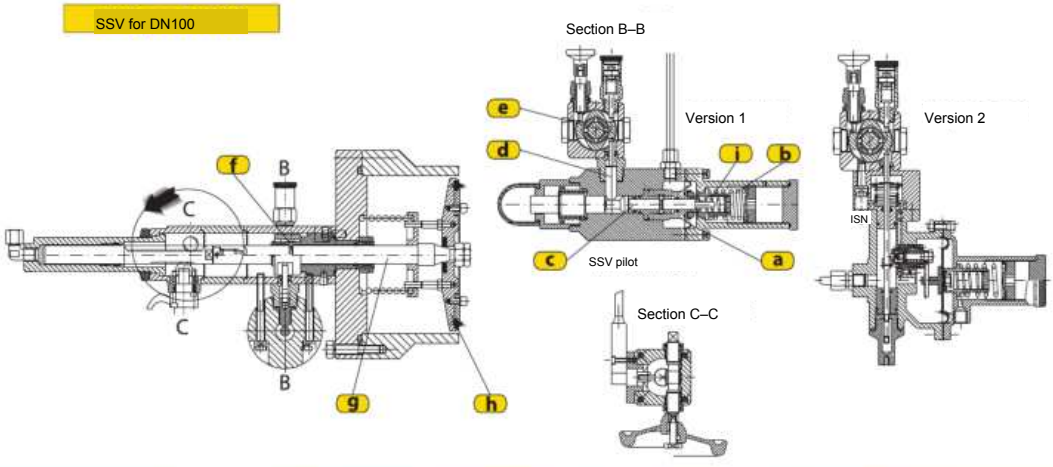

Pressure regulator type: 127-BV/

Inlet | Outlet pressure p1		pressure p2	DN40		DN50			DN65		DN80		DN100	
			ØD (mm)		ØD (mm)			ØD (mm)		ØD (mm)		ØD (mm)	
mbar | bar		mbar	31	42	31	42	53	53	65	65	82	82	102
200		20	200	310	250	510	615	815	900	990	1365	1620	1750
		50	187	230	230	320	460	605	810	920	1185	1415	1500
		100	158	170	195	230	295	405	610	770	990	1280	1350
400		20	295	410	365	680	885	1180	1250	1440	2070	2510	2750
		50	285	360	355	590	800	1060	1250	1400	1950	2250	2600
		100	275	320	335	410	700	920	1150	1330	1710	1900	2300
		200	230	280	285	320	430	585	750	1130	1305	1620	2000
600		20	395	560	480	950	1220	1660	2000	2400	2800	3700	4500
		50	390	560	480	810	1150	1550	2000	2400	2700	3700	4500
		100	380	540	460	720	1070	1420	1700	2100	2400	3300	4500
		200	370	490	450	620	800	1070	1520	1800	2100	3100	4100
		400	310	390	370	430	590	800	1250	1550	1700	2800	3800
	1	20	470	750	580	1120	1450	1940	2450	2800	3470	4100	5100
		50	470	750	580	1120	1450	1940	2450	2800	3400	4100	5100
		100	470	750	580	1020	1380	1820	2100	2650	3100	4100	5100
		200	465	690	570	980	1030	1400	1900	2300	2800	3900	4800
		400	435	530	535	960	880	1170	1500	1800	2100	3500	4500
		500	410	510	515	940	850	1040	1400	1700	2000	3400	4400
	2	20	710	930	875	1450	1720	2600	2600	3150	3950	4600	6500
		50	710	930	875	1450	1720	2600	2600	3150	3950	4600	6500
		100	710	930	875	1400	1720	2600	2600	3150	3700	4400	6500
		200	710	930	875	1280	1610	2420	2500	2900	3400	4100	6200
		400	710	930	875	1150	1260	2150	2400	2800	3300	4000	6000
		500	700	890	865	1020	1185	1800	2300	2650	3100	3900	5800
	3	20	940	1100	1000	1720	1720	2600	2600	3950	3950	5250	6500
		50	940	1100	1165	1720	1720	2600	2600	3950	3950	5250	6500
		100	940	1100	1165	1720	1720	2600	2600	3950	3950	5250	6500
		200	940	1250	1165	1630	1960	2900	3100	3950	4300	6000	7100
		400	940	1100	1165	1410	1605	2600	3000	3800	4600	6100	7300
		500	940	1050	1165	1280	1530	2400	2800	3600	4800	6100	7700
	4	20	990	1100	1100	1720	1720	2600	2600	3950	3950	6500	6500
		50	1100	1100	1300	1720	1720	2600	2600	3950	3950	6500	6500
		100	1100	1100	1450	1720	1720	2600	2600	3950	3950	6500	6500
		200	1190	1250	1700	1960	1960	3100	3100	4100	4450	6800	7100
		400	1190	1430	1700	2100	2270	3600	3600	4600	5050	7200	8200
		500	1190	1600	1700	2100	2750	4050	4400	4900	5400	7600	9900
	7	20	1100	-	1720	1720	-	2600	-	3950	-	6500	-
		50	1100	-	1720	1720	-	2600	-	3950	-	6500	-
		100	1100	-	1720	1720	-	2600	-	3950	-	6500	-
		200	1250	-	1960	1960	-	3100	-	4250	-	7100	-
		400	1430	-	2270	2270	-	3600	-	4800	-	7900	-
		500	1650	-	2320	2750	-	4400	-	5600	-	9300	-
	10	20	1100	-	1720	1720	-	2600	-	3950	-	6500	-
		50	1100	-	1720	1720	-	2600	-	3950	-	6500	-
		100	1100	-	1720	1720	-	2600	-	3950	-	6500	-
		200	1250	-	1960	1960	-	3100	-	4450	-	7100	-
		400	1450	-	2270	2270	-	3600	-	5200	-	8200	-
		500	1700	-	2400	2700	-	4400	-	6350	-	10000	-
	12	20	1100	-	1720	1720	-	2600	-	3950	-	6500	-
		50	1100	-	1720	1720	-	2600	-	3950	-	6500	-
		100	1100	-	1720	1720	-	2600	-	3950	-	6500	-
		200	1250	-	1960	1960	-	3100	-	4450	-	7100	-
		400	1450	-	2270	2270	-	3600	-	5200	-	8200	-
		500	1700	-	2400	2700	-	4400	-	6350	-	10000	-

Pressure regulator 127-BV is normally manufactured for outlet pressures of 0.01–0.5 bar; on request, up to 4 bar.

Flow-rate values are given in Nm³/h and apply to natural gas of relative density ρ = 0,78 kg/Nm³. For other gases, table flow rates may be corrected by factor f = √(0.6/d). The correction factor (f) and relative density (d) for the most commonly used used substances are given in the table.

SUBSTANCE	RELATIVE DENSITY (d)	CORRECTION FACTOR (f)
air	1	0.77
nitrogen	0.97	0.786
propane	1.57	0.62
butane	2,09	0.53
natural gas	0.6	1
CO_2	1.52	0.63

Integral silencer

– noise reduction up to 10 dB (max. 12 dB)
– easy installation
– easy maintenance
– for low noise, the integral silencer is sufficient without installing an external silencer type 450

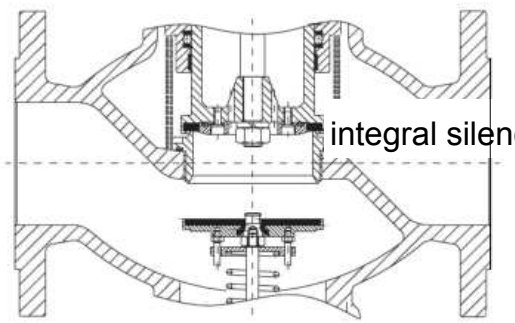

Снижение шума с применением встроенного шумоглушителя

dimensions

PN16

DN / размер	A	B	C	D
40	200	510	95	350
50	230	520	95	350
65	290	525	120	350
80	310	660	125	465
100	350	820	165	630

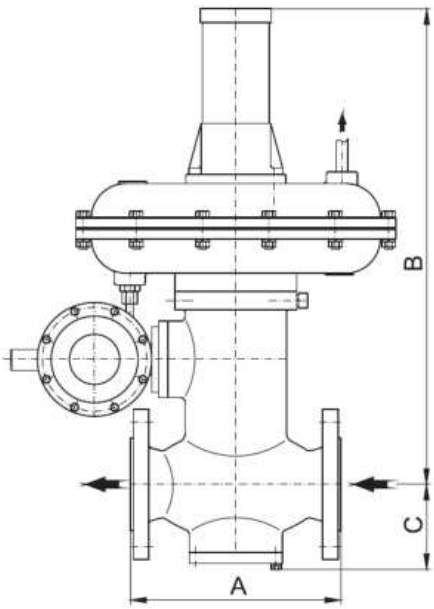

TYPE: 127-BV

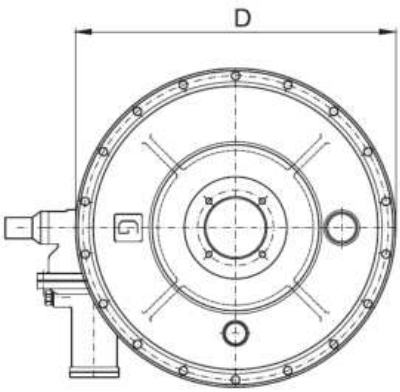

ACCURACY CLASSES

DN	p_2 (bar)	AC	SG
40	0,01÷0,2	10	20
50			
65	0,2÷1,0	5	10
80			
100	1,0÷4,0	2,5	5

	p_{bl} (bar)	AG
VP	0,04÷1,0	10
NP	0,008÷0,02	30
	0,02÷0,05	10

Pressure regulator type 127-BV consists of three main parts: regulator body, main diaphragm mechanism (actuator), and SSV. They are joined by threaded connectors T1 and T2 and can be removed quickly. Pressure regulators type 127-BV comply with EN 334:2010. The manufacturer reserves the right to modify the design for product

improvement.

SERIES
120

pressure regulators
DIRECT-ACTING

HIGH-PRESSURE REGULATORS
WITH GAS SPRING



Type: 128-500



Type: 128-1000

parameters

Inlet pressure: p1 = max. 250 bar

Outlet pressure: p2 = 2–100 bar

Sizes: G3/4"–G1 1/2" (500 Nm³/h)
G1"- G1¼" (1000 m³n/h)

Accuracy class AC: ±5%

Lock-up pressure class SG: up to 10%

Operating temperature range: −20 to +90 °C

Weight: 14 kg (500 Nm³/h); 22 kg (1000 Nm³/h)

application

Compressed natural gas (CNG), nitrogen (N2),
carbon dioxide (CO2) and technical gases

purpose

Pressure regulator type 128 is direct-acting and maintains constant outlet pressure p2 within regulation group RG regardless of flow and inlet pressure p1 variations. A safety valve is built into its gas chamber. It is designed for pressures up to 250 bar and gas temperatures up to 90 °C. Inlet and outlet connections are threaded. When setting gas-spring pressure pG0, the corresponding value is shown on the pressure gauge fitted to the regulator cover.

dimensions

размер / Тип	ØA	B	C	D	R1	R2
128-500	152	238	61	134	3/4"	1"
128-1000	192	283	71	142	1"	1¼"

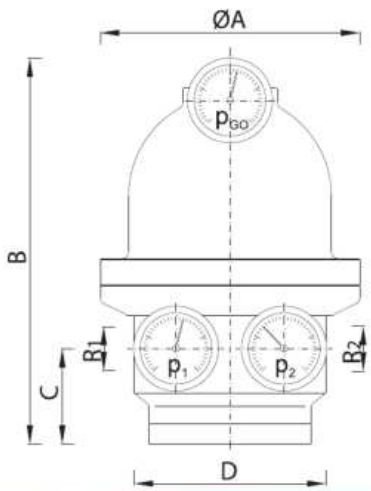

diagram

Pos.	description
	gas pressure regulator
1.	Regulator cover
2.	regulator body
3.	Pressure-gauge connection
4.	Inlet-chamber stem
5.	Regulator seat
6.	Plate
7.	stem
8.	Regulator diaphragm
9.	Outlet-chamber stem
10.	Impulse connection

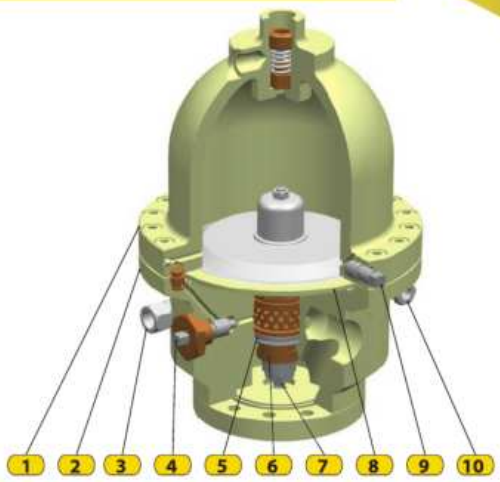

operation

Initially, without gas, regulator 128 is open: gas-spring force from chamber (1) acts through diaphragm (8), pushing stem (7) and disc (6) open. Gas pressure then acts below diaphragm (8), overcomes the gas springs and controls the regulator until preset p2 is reached. If p2 rises, the force below the diaphragm overcomes the springs and inlet pressure p1 on the disc; disc (6) seats on seat (5), closing the regulator. A drop in outlet pressure reopens it and maintains constant p2.

Gas-spring force is set and adjusted using stem (4).

flow tables

Inlet press. p1 (bar)	Outlet press. p2 (bar) 128-500									
	1	2	4	6	10	15	20	30	40	50
5	350	350	320							
10	580	580	580	580						
15	875	1000	1000	1000	850					
20	875	1150	1300	1500	1000	950				
30	875	1300	1700	1800	1900	1900	1700			
40	875	1300	1900	2000	2100	2300	2100	2000		
60	875	1300	2200	2300	2600	3000	3100	3100	2800	2100
80	875	1300	2200	2500	2900	3600	3900	3900	3900	3500
100	875	1300	2200	2800	3200	4100	4250	4300	4300	4300
120	875	1300	2200	3100	3600	4800	5000	5200	5800	5600
140	875	1300	2200	3100	3950	5400	6000	6400	6900	6900
160	875	1300	2200	3100	4350	5800	6600	7100	7600	8200
180	875	1300	2200	3100	4800	6500	7500	8200	8700	9000
200	875	1300	2200	3100	4800	7100	8400	9100	9700	10000
v=200 m/s	700	1050	1750	2450	3850	5700	7600	11500	15300	20000

Inlet press. p1 (bar)	Outlet press. p2 (bar) 128-1000									
	1	2	4	6	10	15	20	30	40	50
5	640	640	610							
10	1000	1000	1000	1000						
15	1230	1300	1300	1300	1250					
20	1230	1900	2150	2500	2100	1900				
30	1230	1900	2800	3100	3400	3400	3000			
40	1230	1900	3100	3600	3900	4200	4200	4000		
60	1230	1900	3100	4100	4400	4800	4900	5100	4900	4900
80	1230	1900	3100	4350	5000	5600	6000	6300	6400	6400
100	1230	1900	3100	4350	5700	6200	6700	7000	7200	7400
120	1230	1900	3100	4350	6300	7000	7500	8000	8400	8800
140	1230	1900	3100	4350	6850	7500	8100	8700	9200	9700
160	1230	1900	3100	4350	6850	8200	8900	9700	10100	10500
180	1230	1900	3100	4350	6850	8900	9800	10500	11000	11700
200	1230	1900	3100	4350	6850	9400	10600	11200	12000	13000
v = 200 m/s | 1000	1500	2500	3500	5500	8000	10500	16000	23100	30250	

When selecting a regulator, take the flow-rate value from the table for the relevant nominal size and inlet/outlet pressures. Compare it with the last table row, where the recommended outlet velocity is 200 m/s, and

select the lower value.

Table flow rates are given in Nm³/h and apply to natural gas with a density of

ρ = 0.78 kg/Nm³. For other gases, multiply table values by correction factor

f = √(0.6/d). Correction factor (f) and relative density (d) for commonly used substances

are given in the table.

SUBSTANCE	RELATIVE DENSITY (d)	CORRECTION FACTOR (f)
air	1	0.77
nitrogen	0.97	0.786
propane	1.57	0.62
butane	2,09	0.53
natural gas	0.6	1
CO_2	1.52	0.63

GasTeh

SERIES 120

pressure regulators
DIRECT-ACTING



HIGH-PRESSURE REGULATORS WITH GAS SPRING

Type: 128-P

parameters

Inlet pressure: p1 = max. 250 bar

Outlet pressure: p2 = 2–100 bar

Sizes: DN25, DN50, ANSI 900, ANSI 1500

Accuracy class AC: ±5%

Lock-up pressure class SG: up to 10%

Operating temperature range: −20 to +90 °C

application

Compressed natural gas (CNG), nitrogen (N2), carbon dioxide (CO2) and technical gases

purpose

Pressure regulator type 128-P is direct-acting and maintains constant outlet pressure p2 within regulation group RG regardless of flow and inlet pressure p1 variations. A safety valve is built into its gas chamber. It is designed for pressures up to 250 bar and gas temperatures up to 90 °C. Inlet and outlet connections are threaded. When setting gas-spring pressure pG0, the corresponding value is shown on the pressure gauge fitted to the regulator cover.

dimensions

размер / DN	ØA	B	C	D	$DN_{вх}$	$DN_{вых}$
25	257	681	125	254	25	25
50	257	750	166	378	50	50
80 ANSI900	257	865	193	441	80	80
80 ANSI1500	257	865	193	460	80	80

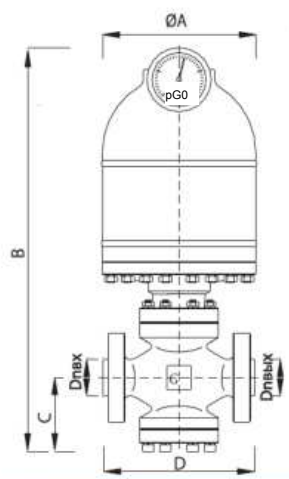

diagram

Item	description
	gas pressure regulator
1.	Regulator cover
2.	regulator body
3.	Opening indicator
4.	Inlet-chamber stem
5.	Regulator seat
6.	Piston
7.	stem
8.	Regulator diaphragm
9.	Outlet-chamber stem
10.	Impulse connection

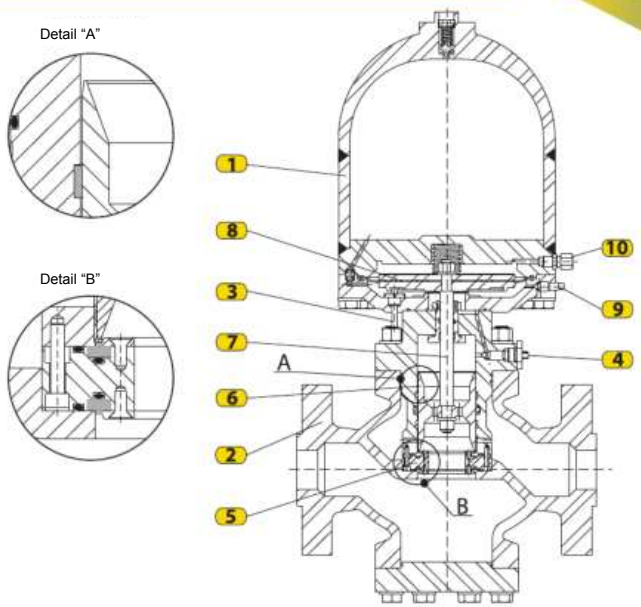

operation

Initially, regulator 128-P is open: gas-spring force from chamber (1) acts through diaphragm (8), pushing stem (7) and piston (6) open. Gas pressure above diaphragm (8) overcomes the springs and controls the regulator to preset p2. If p2 rises, piston (6) seats on seat (5) and closes it. A drop in p2 reopens it and maintains p2. Gas-spring force is set by inlet stem (1) and released by stem (9). If the contact faces of piston (6) or seat (5) are damaged, their opposite faces may be used in servicing.

parts.

flow tables

Inlet press. (bar)	Outlet p. (bar)									
	2	4	6	12	20	30	40	50	80	100
15	1400	1800	1800	1600				KG=441		
20	1600	2400	2500	2500						
30	1600	2400	3100	4800	4800			DN25		
40	1600	2400	3100	5100	6100	5500				
50	1600	2400	3100	5100	7500	7300	6400			
60	1600	2400	3100	5100	8200	10500	10300	9400		
70	1600	2400	3100	5100	8200	11200	11200	10500		
80	1600	2400	3100	5100	8200	12100	13500	14200		
90	1600	2400	3100	5100	8200	12100	15000	16000	15000	
100	1600	2400	3100	5100	8200	12100	17000	19000	17000	
120	1600	2400	3100	5100	8200	12100	17000	22000	21000	19000
130	1600	2400	3100	5100	8200	12100	17000	22000	27000	26000
140	1600	2400	3100	5100	8200	12100	17000	22000	32000	37000
150	1600	2400	3100	5100	8200	12100	17000	22000	36000	40000
V = 180 m/s | 1050	1750	2470	4650	7350	10850	14350	18450	31600	41650	

Inlet pres. (bar)	Outlet p. (bar)									
	2	4	6	12	20	30	40	50	80	100
15	4200	6800	7200	8100				KG=1690		
20	4600	7200	9600	11200						
30	4600	8100	10500	16100	16100			DN50		
40	4600	8100	11200	18200	24000	24000				
50	4600	8100	11200	19500	30000	30000	28000			
60	4600	8100	11200	19500	32000	39000	39000	37000		
70	4600	8100	11200	19500	32000	44000	46000	46000		
80	4600	8100	11200	19500	32000	47000	54000	56000		
90	4600	8100	11200	19500	32000	47000	58000	68000	60000	
100	4600	8100	11200	19500	32000	47000	64000	78000	74000	
120	4600	8100	11200	19500	32000	47000	64000	84000	83000	80000
130	4600	8100	11200	19500	32000	47000	64000	84000	95000	93000
140	4600	8100	11200	19500	32000	47000	64000	84000	125000	142000
150	4600	8100	11200	19500	32000	47000	64000	84000	135000	165000
V = 180 m/s | 4230	7050	9870	18580	29610	43710	57810	79600	136450	179460	

When selecting a regulator, take the flow-rate value from the table for the relevant nominal size and inlet/outlet pressures. Compare it with the last table row, where the recommended outlet velocity is 180 m/s, and

select the lower value.

Table flow rates are given in Nm³/h and apply to natural gas with a density of
ρ = 0.78 kg/Nm³. For other gases, multiply table values by correction factor
f = √(0.6/d). Factor (f) and relative density (d) for common substances
are given in the table.

SUBSTANCE	RELATIVE DENSITY (d)	CORRECTION FACTOR (f)
air	1	0.77
nitrogen	0.97	0.786
propane	1.57	0.62
butane	2,09	0.53
natural gas	0.6	1
CO_2	1.52	0.63

SERIES
130

PILOT-OPERATED REGULATORS

LOW AND MEDIUM PRESSURE

pressure regulators

WITH OR WITHOUT SAFETY SHUT-OFF VALVE



Type: 131

parameters

Inlet pressure: p1 = max 12 bar

Outlet pressure: p2=0.05–4 bar

Sizes: DN25–DN65 PN16/25, ANSI150

climatic version: U and KhL (down to -60 °C)



Type: 131-BV

application

natural gas, propane-butane

air, nitrogen and industrial gases

installation and purpose

Pressure regulator type : 131 is a pilot-operated pressure regulator

The pilot regulator maintains stable outlet pressure p2 to accuracy class AC, irrespective of inlet pressure p1 and gas flow. Impulse lines V1 feed gas at pressure p2 to the pilot and regulator. The regulator may have an SSV for outlet overpressure (-V) or overpressure and underpressure (-V/NP). Use only clean gas and install an upstream filter. Standard flow is left-to-right (left-hand version); a right-hand version is available on request. Install vertically in a horizontal gas line.

I inlet shut-off valve
filter
Pressure regulator type: 131-BV
IV safety valve
V vent valve

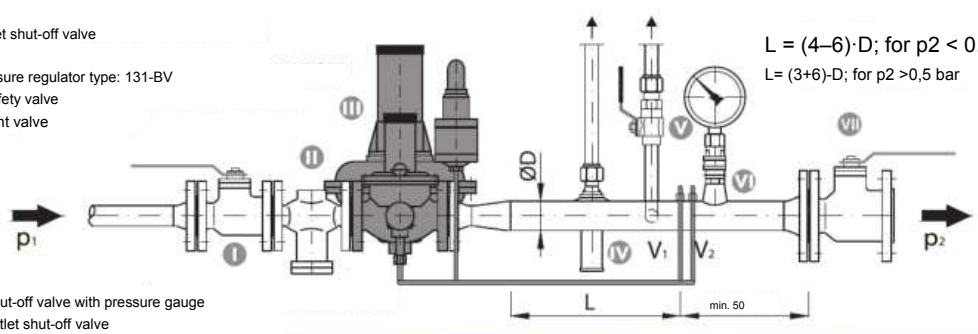

VI Shut-off valve with pressure gauge
VII outlet shut-off valve

L = (4–6)·D; for p2 < 0.5 bar

L= (3+6)-D; for p2 >0,5 bar

Initially, with no gas in the pipeline, regulator 131-BV is closed: spring 7 acts through diaphragm mechanism, lever 5 and stem 4, pressing plug 3 against seat 2).

When gas is supplied, inlet pressure reaches the pilot and upper diaphragm chamber, overcomes spring 7, moves diaphragm 6 and opens the regulator. Gas at outlet pressure enters the lower chamber through the impulse line and acts oppositely. Upper pressure plus spring 7 closes; lower pressure opens. The pilot balances the forces: the diaphragm throttles the seat as outlet pressure changes, maintaining the downstream setpoint. Set p2 with the pilot screw, secure with the locknut and fit the clear cap.

SSV OPERATION

Above the SSV trip setting, its diaphragm mechanism rises, pulls lever 22 and releases latch tooth 18. Sleeve 14 and stem 13 are released; stem spring 19 presses plug 11 onto seat 2. High-pressure tripping acts against HP spring 16, set by HP nut 15. Low-pressure tripping is produced by LP spring 20, which moves the diaphragm mechanism down; lever 22 releases the latch and trips the SSV. LP spring 20 is set by LP nut 17.

Reset the SSV only manually (after determining the trip cause and eliminating it), as follows:

Unscrew reset handle 23 from SSV body 12, turn it over and screw it onto SSV stem 13. Slowly pull handle 23 and hold it for several seconds until SSV pressure equalizes. Then pull handle 23 fully; stem 13 must latch in the reset position. The SSV is reset. Then unscrew reset handle 23,

turn it over and screw it back into body 12.

SSV reset

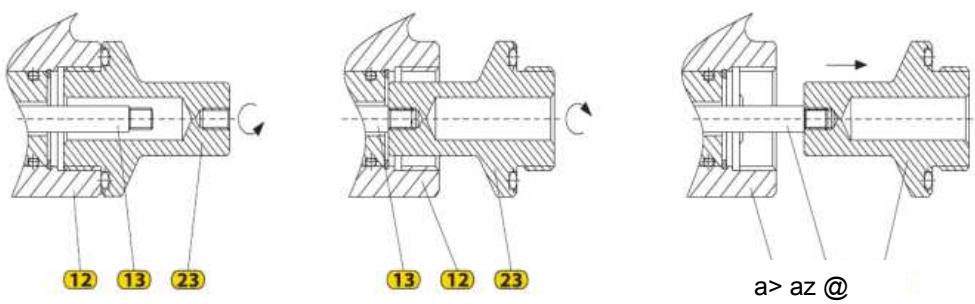

a> az @

Item	Description	Material	8	Adjusting nut	Steel St3ps; St3sp	16.	HP spring	Spring steel wire
	pressure regulator		9.	Diaphragm housing	Al alloy AK9ch	17.	LP adjusting nut	Steel St3ps; St3sp
1.	regulator body	Steel 20L	10.	spring housing	Al alloy AK9ch		Latch tooth	Steel 20Kh13
2.	seat	Brass LS-58-3		SSV		19.	Stem spring	Spring steel wire
3.	Seat disc	Brass LS-58-3	11.	valve disc	Brass LS-58-3	20.	LP spring	Spring steel wire
4.	stem	Steel 08Kh18N10	12.	Lower SSV body	Al alloy AK9ch	21.	Upper SSV body	Al alloy AK9ch
5.	lever	Сталь 08; 08кп	13.	stem	Steel 08Kh18N10	22.	lever	Steel 08; 08kp
6.	diaphragm	EPDM	14.	Sleeve	Steel 08Kh18N10	23.	Reset handle	Brass LS-58-3
7.	spring	Spring steel wire	15.	HP adjusting nut	Steel St3ps; St3sp	24.	Stem extension	Brass LS-58-3

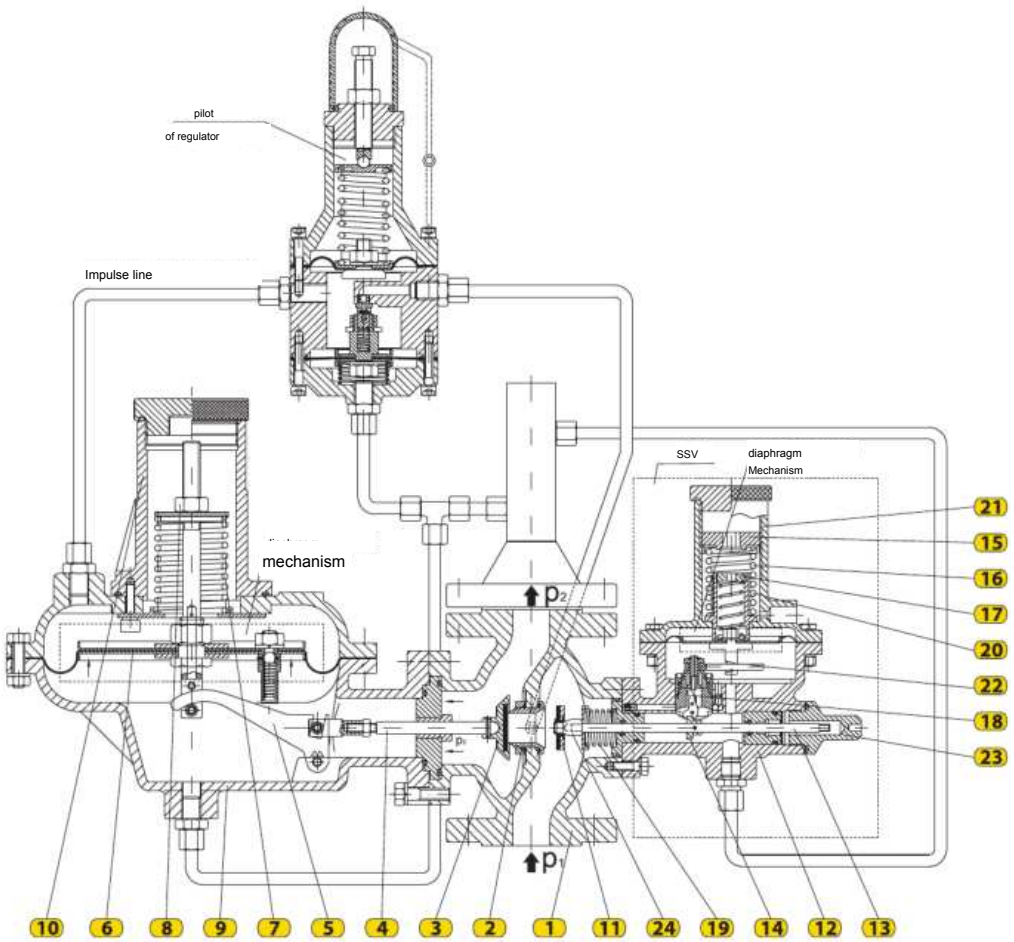

Pressure regulator type: 131, 131-BV

inlet pressure (bar)	seat Ød (mm)	Outlet pressure p2 (bar)										DN25
		0,02	0,05	0,10	0,20	0,30	0,50	1	1,5	2	3	4
0,5	18	160	160	150	140	100	-	-	-	-	-	-
	20	240	240	215	185	160	-	-	-	-	-	-
1	18	280	280	280	280	300	210	-	-	-	-	-
	20	350	350	350	350	370	280	-	-	-	-	-
2	18	410	410	410	410	490	490	460	430	-	-	-
	20	630	630	630	630	710	710	680	650	-	-	-
3	18	580	580	580	580	630	630	580	580	400	-	-
	20	810	810	810	810	860	860	810	810	630	-	-
4	18	670	670	670	720	720	720	720	720	680	310	-
	20	930	930	930	1040	1010	1040	1040	1040	1000	600	-
5	18	910	910	910	1030	1030	1030	1030	1030	980	570	420
	20	950	950	950	1060	1060	1060	1060	1060	1020	630	510
6	18	950	950	950	1060	1060	1060	1060	1060	1060	1070	420
	20	950	950	950	1060	1060	1060	1390	1610	1610	1410	510
8	18	950	950	950	1060	1060	1060	1390	1610	1610	1410	1410
10	18	950	950	950	1060	1060	1060	1390	1610	1610	1410	1410
12	18	950	950	950	1060	1060	1060	1390	1610	1610	1410	1350
Viz = 180 m/s	/	357	368	385	420	455	525	700	875	1050	1400	1750

inlet pressure (bar)	seat Ød (mm)	Outlet pressure p2 (bar)										DN32
		0,02	0,05	0,10	0,20	0,30	0,50	1	1,5	2	3	4
0,5	18	175	175	165	155	100	-	-	-	-	-	-
	20	255	255	230	200	180	-	-	-	-	-	-
1	18	310	310	310	310	330	225	-	-	-	-	-
	20	365	365	365	365	385	225	-	-	-	-	-
2	18	425	425	425	425	510	510	480	450	-	-	-
	20	655	655	655	655	730	730	695	675	-	-	-
3	18	610	610	610	610	655	655	610	610	420	-	-
	20	825	825	825	825	890	890	825	825	645	-	-
4	18	710	710	710	760	760	760	760	760	720	350	-
	20	935	935	935	1045	1045	1045	1045	1045	1015	615	-
5	18	925	925	925	1060	1060	1060	1060	1060	920	610	460
	20	950	950	950	1100	1100	1100	1100	1100	1040	720	550
6	18	950	950	950	1060	1060	1060	1060	1060	1180	1110	510
	20	950	970	1000	1100	1180	1180	1430	1650	1650	1460	630
8	18	950	970	1000	1100	1150	1210	1450	1710	1710	1710	1610
10	18	950	950	970	1080	1110	1150	1510	1720	1720	1760	1680
12	18	950	960	1000	1060	1120	1210	1590	1810	1830	1860	1790
Viz = 180 m/s	/	695	678	708	775	835	970	1290	1615	1950	2600	3245

inlet pressure (bar)	seat Ød (mm)	Outlet pressure p2 (bar)										DN40
		0,02	0,05	0,10	0,20	0,30	0,50	1	1,5	2	3	4
0,5	18	200	200	185	170	120	-	-	-	-	-	-
	20	300	300	285	230	170	-	-	-	-	-	-
1	18	350	350	350	350	370	280	-	-	-	-	-
	20	510	510	510	510	550	430	-	-	-	-	-
2	18	630	630	630	630	710	710	680	650	-	-	-
	20	810	810	810	810	940	925	890	850	-	-	-
3	18	810	810	810	810	860	860	810	810	630	-	-
	20	950	950	950	1080	1120	1260	1260	1210	740	-	-
4	18	940	940	940	1060	1060	1060	1060	1060	1020	630	-
	20	950	970	1000	1100	1180	1360	1650	1650	1540	820	-
5	18	950	970	1000	1100	1180	1310	1310	1310	1280	1170	650
	20	950	970	1000	1100	1180	1360	1770	1850	1790	1580	810
6	18	950	970	1000	1100	1180	1360	1560	1560	1560	1470	820
	20	950	970	1000	1100	1180	1360	1770	2010	2010	1830	940
8	18	950	970	1000	1150	1320	1720	1810	1810	1810	1810	1810
10	18	950	970	1000	1100	1180	1360	1770	1950	1950	1990	1910
12	18	950	970	1000	1100	1180	1360	1770	2150	2170	2230	2150
Viz = 180 m/s	/	960	987	1034	1128	1222	1410	1880	2350	2820	3760	4700

inlet pressure (bar)	seat Ød (mm)	Outlet pressure p2 (bar)										DN50
		0,02	0,05	0,10	0,20	0,30	0,50	1	1,5	2	3	4
0,5	18	240	240	220	220	180	-	-	-	-	-	-
	20	351	351	333	280	235	-	-	-	-	-	-
1	18	390	390	390	390	410	300	-	-	-	-	-
	20	570	570	570	570	570	570	-	-	-	-	-
2	18	650	650	650	650	730	730	700	670	-	-	-
	20	825	825	825	825	950	930	910	860	-	-	-
3	18	820	820	820	820	870	670	820	820	650	-	-
	20	1080	1080	1080	1080	1210	1210	1210	1160	845	-	-
4	18	980	980	980	1100	1100	1100	1100	1100	1080	690	-
	20	1310	1340	1340	1340	1510	1510	1510	1510	1410	810	-
5	18	1150	1150	1150	1260	1260	1260	1260	1260	1230	1130	1010
	20	1310	1380	1440	1560	1680	1810	1810	1810	1780	1590	1510
6	18	1280	1280	1280	1390	1390	1390	1390	1390	1390	1350	1110
	20	1310	1380	1440	1560	1680	1920	2110	2110	2110	1970	1850
8	18	1310	1380	1440	1560	1680	1810	1810	1810	1810	1760	1680
10	18	1310	1380	1440	1560	1690	1870	1870	1920	1920	1980	1950
12	18	1310	1380	1440	1560	1690	1940	1960	2020	2060	2120	2090
z = 180 m/s	/	1450	1490	1560	1690	1850	2130	2830	3520	4250	5680	7158

Maximum gas velocity at the regulator inlet shall be 50–60 m/s to meet the permissible velocity at the SSV inlet. Gas velocity at the regulator seat shall not exceed 180 m/s. When selecting a regulator, take the flow value from the table for the nominal diameter and inlet/outlet pressures. Compare it with the lower table value corresponding to a seat velocity up to 180 m/s and select the smaller value.

Flow-rate values are given in Nm³/h and apply to natural gas of relative density ρ = 0,78 kg/Nm³.

For other gases, the tabulated flow rates may be corrected using the coefficient f = \0.6/4. Correction factor (® and specific density (d) for the most commonly used gases is given in the table.

SUBSTANCE	RELATIVE DENSITY (d)	CORRECTION FACTOR f)
air	1	0.77
nitrogen	0.97	0.786
propane	1.57	0.62
butane	2,09	0.53
natural gas	0.6	1
CO_2	1.52	0.63

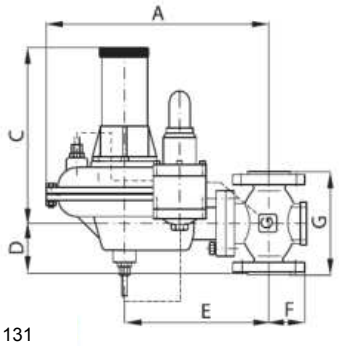

TYPE: 131

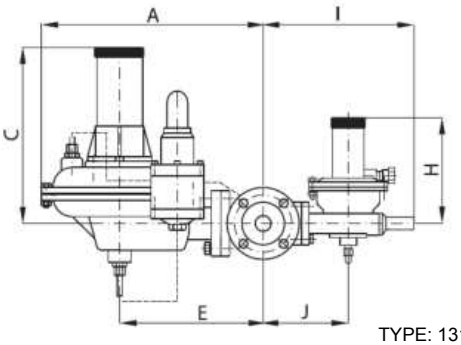

TYPE: 131-BV

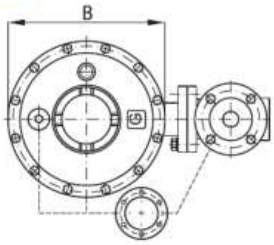

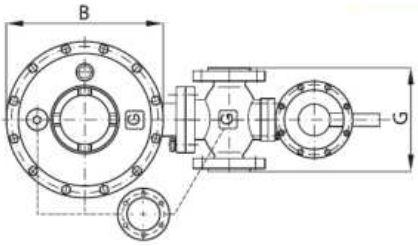

dimensions

PN16/25

SIZE / DN	A	B	C	D	E	F	G	H	I	J
	(mm)									
25	355	250	225	80	230	60	160	165	225	135
32	355	250	225	90	230	60	180	165	225	135
40	365	250	225	100	240	70	200	165	230	145
50	375	250	225	115	250	75	230	165	235	150
65	420	250	225	145	290	95	290	165	290	190

ACCURACY CLASSES

DN	P_2 (bar)	AC	SG
25 ÷ 65	0,05÷0,1	10	20
	0,1÷1,0	5	10
	1,0÷4,0	2,5	5

	P_{bl} (bar)	AG
VP	0,03÷2,0	2,5
	2,0÷5,0	
NP	0,002÷0,6	5

Relief valve set pressure

Pov = p2 + 30 mbar + 10%

Pressure regulator type 131-BV meets EN 334:2010. The manufacturer reserves the right to modify the design for its improvement.

SERIES
130

PILOT-OPERATED REGULATORS

LOW AND MEDIUM PRESSURE

pressure regulators

WITH OR WITHOUT SAFETY SHUT-OFF VALVE



Type: 132

parameters

Inlet pressure: p1 = max 12 bar

Outlet pressure: p2 = 0.01 ÷ 4 bar

Sizes: DN40–DN65 PN16/25, ANSI150

climatic version: U and KhL (down to -60 °C)



Type: 132-BV

application

natural gas, propane-butane

air, nitrogen and industrial gases

installation and purpose

Pressure regulator type : 132 is a pilot-operated pressure regulator

The pilot regulator maintains stable outlet pressure p2 to accuracy class AC, irrespective of inlet pressure p1 and gas flow. Impulse lines V1 feed gas at pressure p2 to the pilot and regulator. The regulator may have an SSV for outlet overpressure (-V) or overpressure and underpressure (-V/NP). Use only clean gas and install an upstream filter. Standard flow is left-to-right (left-hand version); a right-hand version is available on request. Install vertically in a horizontal gas line.

I inlet shut-off valve
filter
Pressure regulator type: 132-BV
IV safety valve
V vent valve

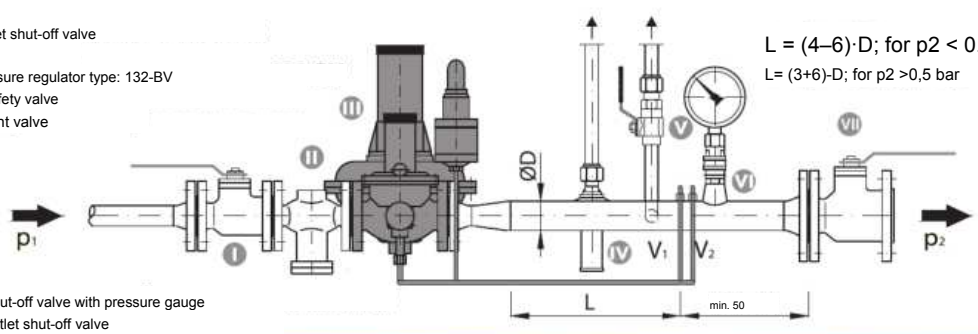

VI Shut-off valve with pressure gauge
VII outlet shut-off valve

L = (4–6)·D; for p2 < 0.5 bar

L= (3+6)-D; for p2 >0,5 bar

Initially, with no gas in the pipeline, regulator 132-BV is closed: spring 7 acts through diaphragm mechanism, lever 5 and stem 4, pressing plug 3 against seat 2).

Inlet pressure reaches the pilot and upper diaphragm chamber, overcomes spring 7, moves diaphragm 6 and opens the regulator. Outlet pressure also enters the lower chamber through the impulse line and acts oppositely. Upper pressure plus spring 7 closes; lower pressure opens. The pilot balances these forces: the diaphragm throttles the seat as p2 changes and maintains the setpoint. Set p2 with the pilot screw, locknut and clear cap. Balancing diaphragm 12 equalizes stem force for smooth control.

SSV OPERATION

Above the SSV trip setting, its diaphragm mechanism rises, pulls lever 25 and releases latch tooth 23. Sleeve 17 and stem 16 are released; stem spring 22 presses plug 14 onto seat 2. High-pressure tripping acts against HP spring 18, set by HP nut 19. Low-pressure tripping is produced by LP spring 20, which moves the diaphragm mechanism down; lever 25 releases the latch and trips the SSV. LP spring 20 is set by LP nut 21.

Reset the SSV only manually (after determining the trip cause and eliminating it), as follows:

Unscrew reset handle 26 from SSV body 15, turn it over and screw it onto SSV stem 16. Slowly pull handle 26 and hold it for several seconds until SSV pressure equalizes. Then pull handle 26 fully; stem 16 must latch in the reset position. The SSV is reset. Unscrew handle 26, turn it over and screw it back into body 15.

SSV reset

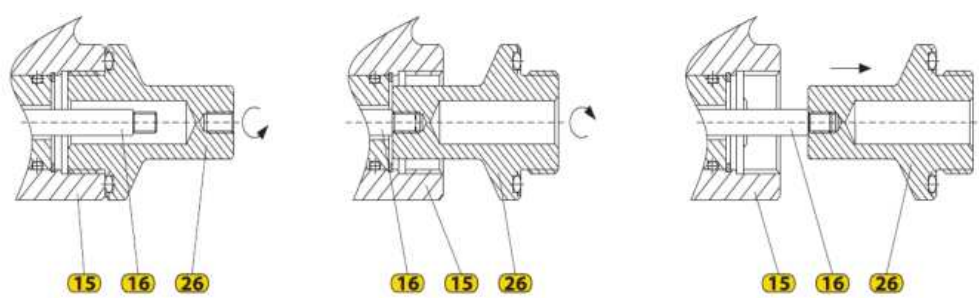

Pos.	Description	Material
	pressure regulator	
1.	regulator body	Steel 20L
2.	seat	Brass LS-58-3
3.	Seat disc	Brass LS-58-3
4.	stem	Steel 08Kh18N10
5.	lever	Steel 08; 08kp
6.	diaphragm	Effbe
7.	spring	Spring steel wire
8.	Adjusting nut	Steel St3ps; St3sp
9.	Diaphragm case	Al alloy AK9ch
10.	Spring housing	Al alloy AK9ch
11.	Nozzle balancing diaphragm	Brass LS-58-3
12.	Balancing diaphragm	Effbe
13.	Spring	Spring steel wire
	SSV	
14.	Plug	Brass LS-58-3
15.	Lower SSV body	Al alloy AK9ch
16.	Stem	Steel 08Kh18N10
17.	Sleeve	Steel 08Kh18N10
18.	HP spring	Spring steel wire
19.	HP adjusting nut	Steel St3ps; St3sp
20.	LP spring	Spring steel wire
21.	LP adjusting nut	Steel St3ps; St3sp
22.	Stem spring	Spring steel wire
23.	Latch tooth	Steel 20Kh13
24.	Upper SSV body	Al alloy AK9ch
25.	lever	Steel 08; 08kp
26.	Reset handle	Brass LS-58-3
27.	Stem extension	Brass LS-58-3

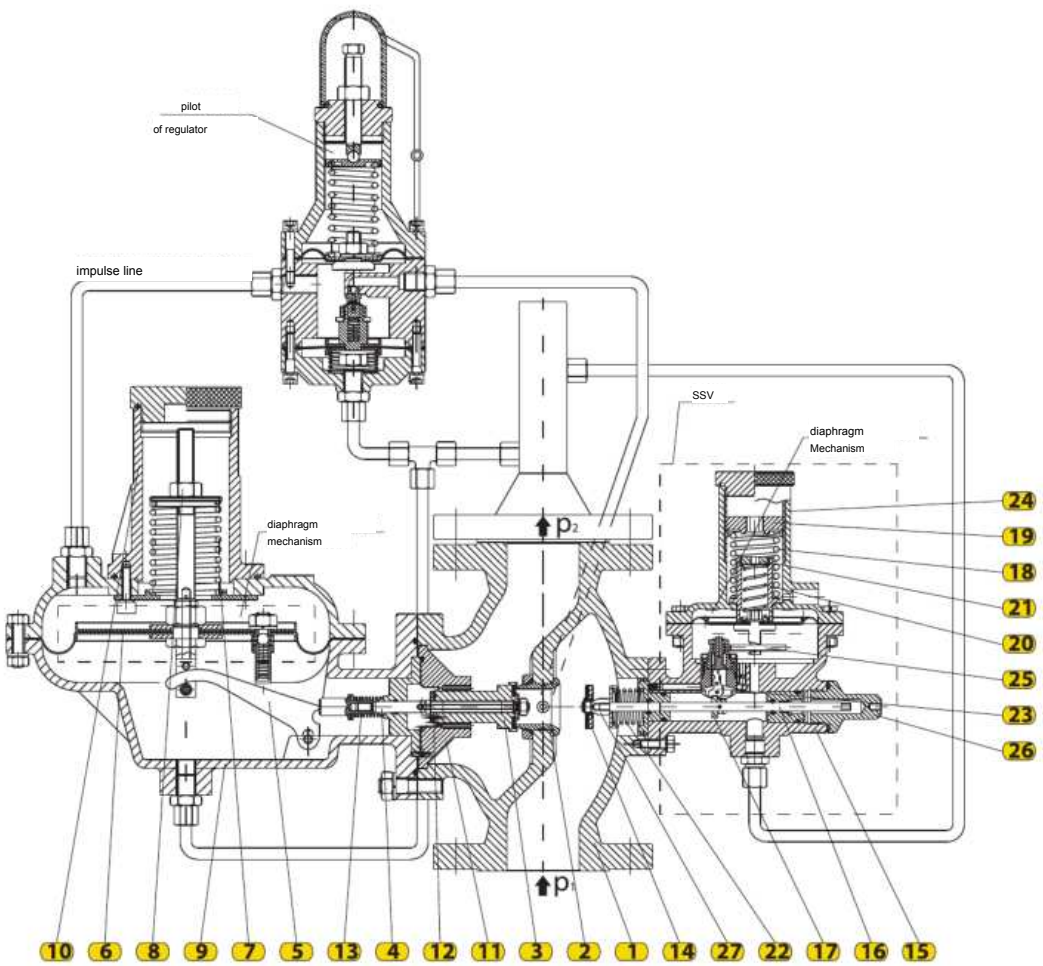

Pressure regulator type: 132, 132-BV

inlet pressure (bar)	seat Ød (mm)	Outlet pressure p2 (bar)										DN40
		0,02	0,05	0,10	0,20	0,30	0,50	1	1,5	2	3	4
0,5	24	340	362	365	350	340	-	-	-	-	-	-
	31	410	450	450	450	420	-	-	-	-	-	-
1	24	595	640	660	655	650	620	-	-	-	-	-
	31	680	710	750	750	750	720	-	-	-	-	-
2	24	740	780	815	850	780	770	770	710	-	-	-
	31	900	950	1020	1080	980	980	980	880	-	-	-
3	24	820	860	900	920	920	920	940	940	860	-	-
	31	950	970	1040	1100	1150	1280	1660	1525	1367	-	-
4	24	910	930	960	980	1090	1210	1480	1590	1740	1460	-
	31	1040	1030	1080	1120	1320	1420	1820	2140	2025	1662	-
5	24	930	1000	1020	1100	1280	1340	1560	1680	1830	2000	2000
	31	1110	1150	1200	1220	1370	1480	1900	2320	2550	2233	1820
6	24	1060	1090	1120	1160	1320	1420	1660	1780	2010	2320	2060
	31	1110	1150	1200	1260	1420	1570	2100	2510	2900	2750	2470
8	24	1110	1150	1200	1260	1420	1640	2180	2730	3250	3400	3200
10	24	1110	1150	1200	1260	1420	1640	2180	2730	3250	4100	3900
12	24	1110	1150	1200	1260	1420	1640	2180	2730	3250	4300	4100
Viz = 180 m/s	/	960	987	1034	1128	1222	1410	1880	2350	2820	3760	4700

inlet pressure (bar)	seat Ød (mm)	Outlet pressure p2 (bar)										DN50
		0,02	0,05	0,10	0,20	0,30	0,50	1	1,5	2	3	4
0,5	31	468	520	526	534	534	-	-	-	-	-	-
	42	503	600	615	645	540	-	-	-	-	-	-
1	31	692	746	760	800	780	746	-	-	-	-	-
	42	900	990	970	1100	950	880	-	-	-	-	-
2	31	870	914	986	1020	1040	1082	1000	868	-	-	-
	42	1380	1430	1630	1640	1520	1560	1500	1290	-	-	-
3	31	960	1010	1130	1385	1650	1470	1625	1342	1270	-	-
	42	1450	1500	1700	1720	1850	1900	2100	1790	1735	-	-
4	31	1100	1135	1325	1540	1700	1780	1866	1935	1950	1900	-
	42	1480	1560	1750	1820	1930	2000	2800	2860	2360	2110	-
5	31	1260	1320	1500	1668	1810	1900	2130	2220	2460	2700	2700
	42	1530	1610	1800	1900	2000	2150	2900	3300	3610	3010	2460
6	31	1360	1410	1600	1740	1920	2050	2420	2680	2860	2990	3000
	42	1650	1700	1830	1980	2100	2300	3000	3610	4100	4620	4500
8	31	1700	1750	1830	2000	2160	2450	3100	3950	4700	5900	5600
10	31	1700	1750	1830	2000	2160	2500	3350	4100	4800	6300	5900
12	31	1700	1750	1830	2000	2160	2500	3350	4100	5000	6600	6300
Viz = 180 m/s	/	1450	1490	1560	1690	1850	2130	2830	3520	4250	5680	7158

inlet pressure (bar)	seat Ød (mm)	Outlet pressure p2 (bar)										DN65
		0,02	0,05	0,10	0,20	0,30	0,50	1	1,5	2	3	4
0,5	42	570	610	620	630	630	-	-	-	-	-	-
	54	810	890	930	960	820	-	-	-	-	-	-
1	42	1000	1070	1080	1150	1050	980	-	-	-	-	-
	54	1200	1280	1300	1400	1310	1210	-	-	-	-	-
2	42	1430	1490	1650	1690	1570	1570	1540	1330	-	-	-
	54	1680	1740	1910	1930	1940	1900	1780	1600	-	-	-
3	42	1520	1580	1760	1780	1920	1990	2220	1890	1770	-	-
	54	1760	1800	1990	2060	2190	2210	2450	2120	2080	-	-
4	42	1590	1640	1820	1900	2010	2100	2520	2680	2350	2150	-
	54	1810	1890	2060	2150	2280	2410	2950	3060	2760	2420	-
5	42	1670	1750	1920	1990	2100	2240	2720	3360	3680	3100	2500
	54	1870	1970	2260	2390	2410	2580	3200	3600	3900	3500	3100
6	42	1800	1860	2000	2180	2360	2570	3120	3750	4200	4700	4600
	54	2000	2120	2350	2450	2490	2690	3400	4050	4390	4950	4850
8	42	2220	2350	2450	2560	2620	2950	3350	4300	5000	6200	5900
10	42	2340	2510	2600	2680	2760	3000	3500	4500	5100	6600	6200
12	42	2500	2600	2710	2790	2850	3000	3500	4500	5300	6900	6500
Viz = 180 m/s	/	2300	2370	2480	2710	2933	3386	4520	5655	6795	9078	11374

Maximum gas velocity at the regulator inlet shall be 50–60 m/s to meet the permissible velocity at the SSV inlet. Gas velocity at the regulator seat shall not exceed 180 m/s. When selecting a regulator, take the flow value from the table for the nominal diameter and inlet/outlet pressures. Compare it with the lower table value corresponding to a seat velocity up to 180 m/s and select the smaller value.

Flow-rate values are given in Nm³/h and apply to natural gas of relative density ρ = 0,78 kg/Nm³.

For other gases, the tabulated flow rates may be corrected using the coefficient f = \0.6/4. Correction factor (® and specific density (d) for the most commonly used gases is given in the table.

SUBSTANCE	RELATIVE DENSITY (d)	CORRECTION FACTOR f)
air	1	0.77
nitrogen	0.97	0.786
propane	1.57	0.62
butane	2,09	0.53
natural gas	0.6	1
CO_2	1.52	0.63

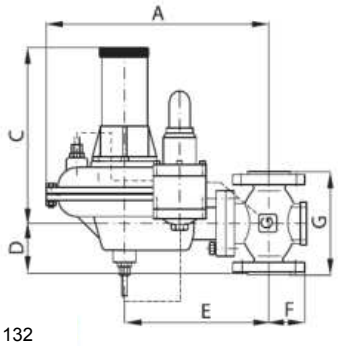

TYPE: 132

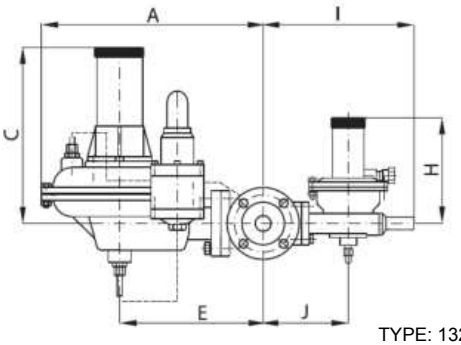

TYPE: 132-BV

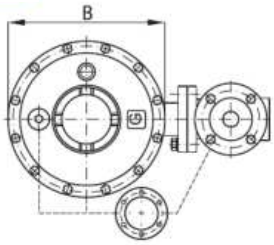

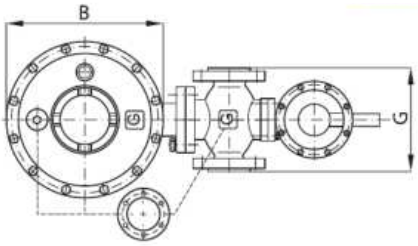

dimensions

PN16/25

SIZE / DN	A	B	C	D	E	F	G	H	I	J
	(mm)									
40	365	250	225	100	240	98	200	165	260	170
50	375	250	225	115	250	103	230	165	280	180
65	375	250	225	145	250	115	290	165	280	190

ACCURACY CLASSES

DN	P_2 (bar)	AC	SG
40 ÷ 65	0,05÷0,1	10	20
	0,1÷1,0	5	10
	1,0÷4,0	2,5	5

	P_{bl} (bar)	AG
VP	0,03÷2,0	2,5
	2,0÷5,0	
NP	0,002÷0,6	5

Relief valve set pressure

Pov = p2 + 30 mbar + 10%

Pressure regulator type 132-BV meets EN 334:2010. The manufacturer reserves the right to modify the design for its improvement.

SERIES
130

PILOT-OPERATED REGULATORS

LOW AND MEDIUM PRESSURE

pressure regulators

WITH OR WITHOUT SAFETY SHUT-OFF VALVE



Type: 135



Type: 135-BV

parameters

Inlet pressure: p1 = max 25 bar

Outlet pressure: p2=0.02–8 bar

Sizes: DN25–DN200 PN16/25, ANSI150

Climate version: U and KhL (to -60 °C)

application

natural gas, propane-butane

air, nitrogen and industrial gases

installation and purpose

Pressure regulator type : 135 is a pilot-operated pressure regulator with a pilot regulator and maintains stable AC-class outlet pressure p, irrespective of changes in inlet pressure p1 and gas flow. Impulse lines V2 feed gas at pressure p2 to the pilot and regulator, which interact to maintain the specified outlet pressure.

Regulator type : 135-BV has an integrated SSV. On request, the regulator can be fitted with an SSV that trips on outlet overpressure only, or on both overpressure and underpressure. Use only clean gas and install a filter upstream. Standard flow is left-to-right (left-hand version); a right-hand version is available on request. Install the regulator vertically in a horizontal gas line.

I inlet shut-off valve
filter
Pressure regulator type: 135-BV
IV safety valve
V vent valve

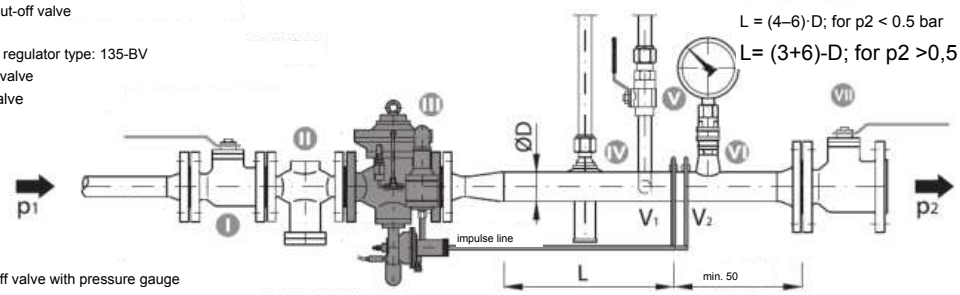

VI Shut-off valve with pressure gauge
VII outlet shut-off valve

With no gas, 135-BV is closed: spring 4 holds diaphragm 3 on its seat; SSV plug 8 is open, pilot closed. Gas crosses seat 5, overcomes spring 4 and lifts diaphragm 3, then passes through the impulse line and throttle to the pilot and upper chamber. Upper pressure with spring 4 closes; the pilot varies this pressure so diaphragm 3 throttles seat 5 and maintains p2. For smooth control, turn and lock the throttle needle; a minimum passage remains when shut. Set p2 with the pilot screw, locknut and clear cap.

SSV OPERATION. REGULATORS DN25–DN65

Above the SSV trip setting, its diaphragm mechanism rises, pulls lever 19 and releases latch tooth 12. Sleeve 11 and stem 10 are released; stem spring 13 presses plug 8 onto seat 2. High-pressure tripping acts against HP spring 15, set by HP nut 14. Low-pressure tripping is produced by LP spring 17, which moves the diaphragm mechanism down; lever 19 releases the latch and trips the SSV. LP spring 17 is set by LP nut 16. Reset the SSV only manually after finding and eliminating the trip cause.

as follows:

Unscrew reset handle 18 from SSV body 9, turn it over and screw it onto SSV stem 10. Slowly pull handle 18 and hold it for several seconds until SSV pressure equalizes. Then pull handle 18 fully; stem 10 must latch in the reset position. The SSV is reset. Unscrew handle 18, turn it over and screw it back into the body.

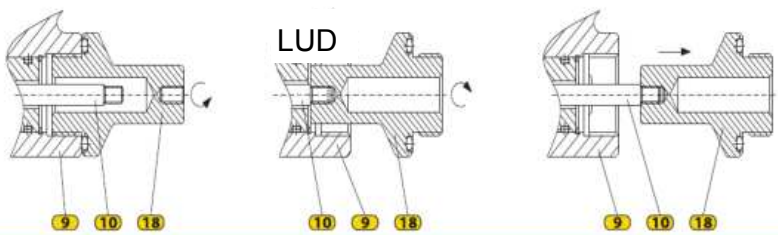

SSV OPERATION, REGULATORS DN80-DN200

Gas at p2 reaches the SSV pilot through the impulse line. If p2 is too high, pressure on diaphragm (a) overcomes spring (b) and moves pilot stem (c); pusher (d) acts on gear (e). Gear (e) turns, balls (f) enter the groove and spring-loaded stem (g) presses plug (h) onto the seat, stopping gas. If p2 is too low, spring (i) moves diaphragm (a) and stem (c); pusher (d) acts on gear (e), balls (f) enter the groove and stem (g) presses plug (h) onto the seat. Reset the SSV manually after eliminating the cause.

as follows:

– close the inlet and outlet shut-off valves of the pressure-reducing line;

– turn the SSV reset wheel slightly counterclockwise to equalize pressure, then turn it fully (the SSV stem must latch);

– slowly open the pressure-reducing line inlet valve.

Pos.	Description	Material
	pressure regulator	
1.	regulator body	Steel 20L
2.	Diaphragm chamber	Steel 30GSL
3.	diaphragm	NBR70
4.	spring	Spring steel wire
5.	Seat holder	Steel St3ps; St3sp
6.	Flap seat	Steel 30GSL
7	Insert	Plastic
	SSV	
8.	valve disc	Brass LS-58-3
9.	Lower SSV body	Al alloy AK9ch
10.	stem	Steel 08Kh18N10
11.	Sleeve	Steel 08Kh18N10
12.	Latch tooth	Steel 20Kh13
13.	spring	Spring steel wire
14.	HP adjusting nut	Steel St3ps; St3sp
15.	HP spring	Spring steel wire
16.	LP adjusting nut	Steel 08; 08kp
17.	LP spring	Spring steel wire
18.	Handle	Al alloy AK9ch
19.	lever	Steel 08; 08kp
20.	Upper SSV body	Al alloy AK9ch
21.	Stem extension	Brass LS-58-3

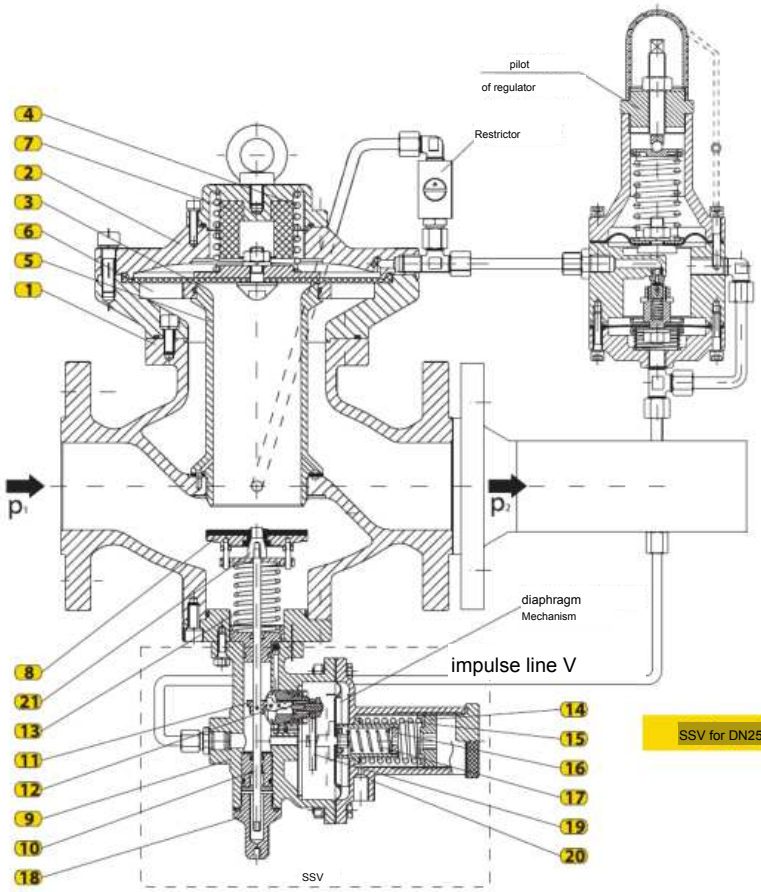

SSV for DN25–DN65

SSV for DN80–DN200

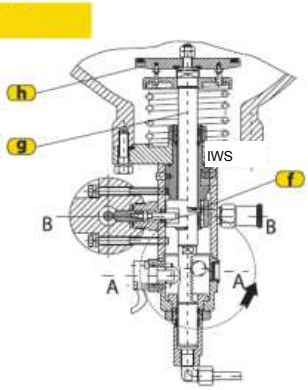

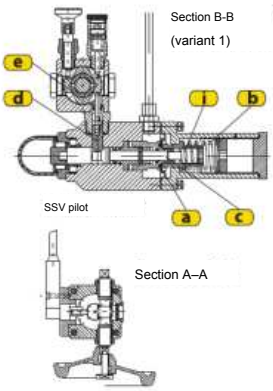

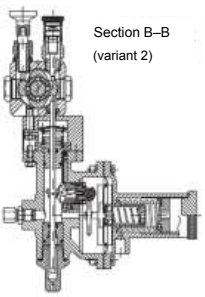

Pressure regulator types: 135, 135-BV

inlet pressure p1 (bar)	Outlet pressure P2 (bar)										DN25
	0,02	0,05	0,2	0,5	1	2	3	4	5	6	8
1	330	330	320	280	-	-	-	-	-	-	-
2	490	490	490	490	460	-	-	-	-	-	-
3	650	650	650	650	650	570	-	-	-	-	-
4	820	820	820	820	820	800	650	-	-	-	-
6	1140	1140	1140	1140	1140	1140	1130	1030	800	-	-
8	1470	1470	1470	1470	1470	1470	1470	1460	1390	1220	-
10	1800	1800	1800	1800	1800	1800	1800	1800	1790	1730	1390
12	2090	2090	2090	2090	2090	2090	2090	2090	2090	2080	1930
16	2730	2730	2730	2730	2730	2730	2730	2730	2730	2730	2730
20	3370	3370	3370	3370	3370	3370	3370	3370	3370	3370	3370
25	4040	4040	4040	4040	4040	4040	4040	4040	4040	4040	4040
Viz = 180 m/s	357	368	420	525	700	1050	1400	1750	2100	2450	3150

inlet pressure p1 (bar)	Outlet pressure P2 (bar)										DN40
	0,02	0,05	0,2	0,5	1	2	3	4	5	6	8
1	850	850	830	730	-	-	-	-	-	-	-
2	1270	1270	1270	1270	1200	-	-	-	-	-	-
3	1700	1700	1700	1700	1700	1470	-	-	-	-	-
4	2120	2120	2120	2120	2120	2080	1700	-	-	-	-
6	2970	2970	2970	2970	2970	2970	2940	2690	2080	-	-
8	3820	3820	3820	3820	3820	3820	3820	3800	3610	3180	-
10	4680	4680	4680	4680	4680	4680	4680	4680	4660	4500	3610
12	5420	5420	5420	5420	5420	5420	5420	5420	5420	5410	5010
16	7090	7090	7090	7090	7090	7090	7090	7090	7090	7090	7090
20	8760	8760	8760	8760	8760	8760	8760	8760	8760	8760	8760
25	10500	10500	10500	10500	10500	10500	10500	10500	10500	10500	10500
Viz = 180 m/s	960	987	1128	1410	1880	2820	3760	4700	5640	6580	8460

inlet pressure p1 (bar)	Outlet pressure P2 (bar)										DN50
	0,02	0,05	0,2	0,5	1	2	3	4	5	6	8
1	1310	1310	1280	1130	-	-	-	-	-	-	-
2	1960	1960	1960	1960	1850	-	-	-	-	-	-
3	2620	2620	2620	2620	2550	1730	-	-	-	-	-
4	3270	3270	3270	3270	3270	3200	2620	-	-	-	-
6	4580	4580	4580	4580	4580	4580	4530	4140	3200	-	-
8	5890	5890	5890	5890	5890	5890	5890	5850	5550	4890	-
10	7190	7190	7190	7190	7190	7190	7190	7190	7160	6920	5550
12	8350	8350	8350	8350	8350	8350	8350	8350	8350	8320	7700
16	10910	10910	10910	10910	10910	10910	10910	10910	10910	10910	10910
20	13480	13480	13480	13480	13480	13480	13480	13480	13480	13480	13480
25	16170	16170	16170	16170	16170	16170	16170	16170	16170	16170	16170
Viz = 180 m/s	1450	1490	1690	2130	2830	4250	5680	7158	8614	10010	12964

inlet pressure p1 (bar)	Outlet pressure P2 (bar)										DN65
	0,02	0,05	0,2	0,5	1	2	3	4	5	6	8
1	1960	1960	1920	1690	-	-	-	-	-	-	-
2	2940	2940	2940	2940	2770	-	-	-	-	-	-
3	3920	3920	3920	3920	3920	3400	-	-	-	-	-
4	4900	4900	4900	4900	4900	4800	3920	-	-	-	-
6	6870	6870	6870	6870	6870	6870	6800	6200	4800	-	-
8	8830	8830	8830	8830	8830	8830	8830	8870	8320	7340	-
10	10790	10790	10790	10790	10790	10790	10790	10790	10750	10380	8320
12	12520	12520	12520	12520	12520	12520	12520	12520	12520	12480	11560
16	16370	16370	16370	16370	16370	16370	16370	16370	16370	16370	16370
20	20220	20220	20220	20220	20220	20220	20220	20220	20220	20220	20220
25	24260	24260	24260	24260	24260	24260	24260	24260	24260	24260	24260
Viz = 180 m/s	2300	2370	2710	3386	4520	6795	9078	11374	13685	16000	20660

inlet pressure p1 (bar)	Outlet pressure p2 (bar)										DN80
	0,02	0,05	0,2	0,5	1	2	3	4	5	6	8
1	3710	3710	3630	3210	-	-	-	-	-	-	-
2	5560	5560	5560	5560	5240	-	-	-	-	-	-
3	7410	7410	7410	7410	7410	6420	-	-	-	-	-
4	9260	9260	9260	9260	9260	9080	7410	-	-	-	-
6	12970	12970	12970	12970	12970	12970	12840	11720	9080	-	-
8	16680	16680	16680	16680	16680	16680	16680	16570	15720	13870	-
10	20380	20380	20380	20380	20380	20380	20380	20380	20300	19610	15720
12	23650	23650	23650	23650	23650	23650	23650	23650	23650	23580	21830
16	30920	30920	30920	30920	30920	30920	30920	30920	30920	30920	30920
20	38200	38200	38200	38200	38200	38200	38200	38200	38200	38200	38200
25	45800	45800	45800	45800	45800	45800	45800	45800	45800	45800	45800
Viz = 180 m/s	3400	3500	3995	4995	6674	10025	13420	16810	20185	23610	30580

inlet pressure p1 (bar)	Outlet pressure p2 (bar)										DN100
	0,02	0,05	0,2	0,5	1	2	3	4	5	6	8
1	5730	5730	5620	4960	-	-	-	-	-	-	-
2	8600	8600	8600	8600	8110	-	-	-	-	-	-
3	11470	11470	11470	11470	11470	9930	-	-	-	-	-
4	14330	14330	14330	14330	14330	14040	11470	-	-	-	-
6	20070	20070	20070	20070	20070	20070	19860	18130	14040	-	-
8	25800	25800	25800	25800	25800	25800	25800	25640	24320	21450	-
10	31530	31530	31530	31530	31530	31530	31530	31530	31400	30340	24320
12	36580	36580	36580	36580	36580	36580	36580	36580	36580	36470	33770
16	47840	47840	47840	47840	47840	47840	47840	47840	47840	47840	47840
20	59100	59100	59100	59100	59100	59100	59100	59100	59100	59100	59100
25	70920	70920	70920	70920	70920	70920	70920	70920	70920	70920	70920
Viz = 180 m/s	5763	5933	6780	8475	11300	16950	22600	28250	33900	39550	50850

inlet pressure (bar)	Outlet pressure p2 (bar)										DN150
	0,02	0,05	0,2	0,5	1	2	3	4	5	6	8
1	12970	12970	12710	11230	-	-	-	-	-	-	-
2	19460	19460	19460	19460	18340	-	-	-	-	-	-
3	25940	25940	25940	25940	25940	22460	-	-	-	-	-
4	32430	32430	32430	32430	32430	31770	25940	-	-	-	-
6	45400	45400	45400	45400	45400	45400	44930	41020	31770	-	-
8	58370	58370	58370	58370	58370	58370	58370	58000	55030	48530	-
10	71340	71340	71340	71340	71340	71340	71340	71340	71040	68640	55030
12	82770	82770	82770	82770	82770	82770	82770	82770	82770	82520	76400
16	108230	108230	108230	108230	108230	108230	108230	108230	108230	108230	108230
20	133700	133700	133700	133700	133700	133700	133700	133700	133700	133700	133700
25	160400	160400	160400	160400	160400	160400	160400	160400	160400	160400	160400
Viz = 180 m/s	12650	12980	14850	18580	24800	37250	49890	62310	75140	87746	113120

DN200 and DN200/250 sizes are available on request. Gas velocity at the regulator inlet shall be 50–60 m/s to meet the permitted velocity at the SSV inlet. At the regulator seat it shall not exceed 180 m/s. Select the flow rate from the table for the nominal size and inlet/outlet pressures; compare it with the bottom-row value for seat velocity up to 180 m/s and use the lower value.

Flow-rate values are given in Nm³/h and apply to natural gas of relative density ρ = 0,78 kg/Nm³.

For other gases, the tabulated flow rates may be corrected using the coefficient f = \0.6/4. Correction factor (® and specific density (d) for the most commonly used gases is given in the table.

SUBSTANCE	RELATIVE DENSITY (d)	CORRECTION FACTOR f)
air	1	0.77
nitrogen	0.97	0.786
propane	1.57	0.62
butane	2,09	0.53
natural gas	0.6	1
CO_2	1.52	0.63

TYPE: 135

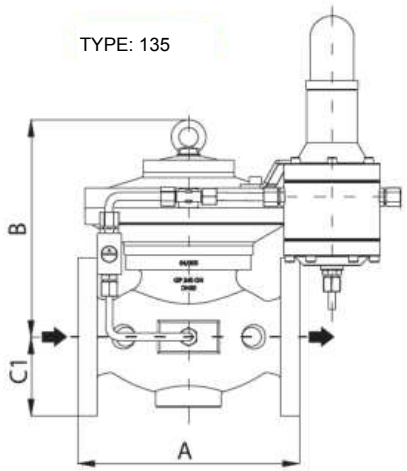

TYPE: 135-BV

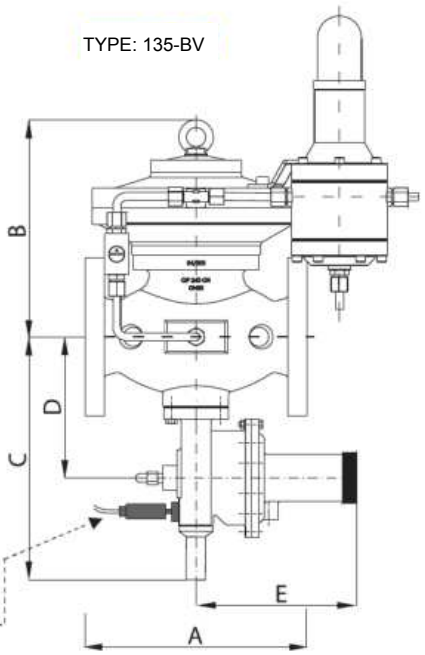

The SSV trip sensor is supplied together with the regulator on request.

dimensions

PN16/25

SIZE / DN	A	B	C	D	E	F	G	H	I	J
	(mm)									
40	365	250	225	100	240	98	200	165	260	170
50	375	250	225	115	250	103	230	165	280	180
65	375	250	225	145	250	115	290	165	280	190

ACCURACY CLASSES

DN	P_2 (bar)	AC	SG
25 ÷ 200	0,02÷0,05	10	20
	0,05÷0,2	5	10
	>2	2,5	5

	P_{bl} (bar)	AG
VP	0,04÷1,0	10
	1,0÷6,0	5
	6,0÷12,0	1
NP	0,008÷0,02	30
	0,02÷0,05	10
	0,5÷10	5

Pressure regulators types 135 and 135-BV comply with EN 334:2010. The manufacturer reserves the right to modify the design in order to

improvement.

SERIES
130

PILOT-OPERATED REGULATORS

LOW AND MEDIUM PRESSURE

AXIAL PRESSURE REGULATORS

(WITH SILENCER)



Type: 135-AX

parameters

Inlet pressure: p1 = max. 20 bar

Outlet pressure: p2 = 0.02–12 bar

Sizes: DN25/80; DN40/100; DN50/150;
DN65/150(200); DN80/200(250); DN100/300
PN16/25, ANSI150

climatic version: U and KhL (down to -60 °C)

application

natural gas, propane-butane

air, nitrogen and industrial gases

INSTALLATION AND PURPOSE

Axial regulator 135-AX is pilot-operated and maintains p2 in group RG despite flow or p1 changes. It handles natural gas, LPG, air, nitrogen and other technical gases. Inlet pressure and p2 form pilot control pressure. Its integral four-point silencer reduces noise. A removable adapter eases service and outlet-flange resizing. A protected port prevents contaminants damaging the diaphragm and seal. It fails open on diaphragm failure. Prefer horizontal mounting; vertical mounting requires upward gas flow.

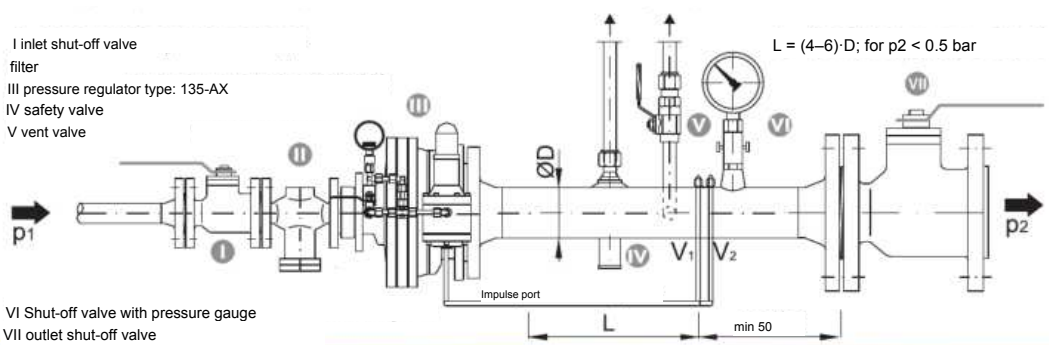

MONITOR REGULATION

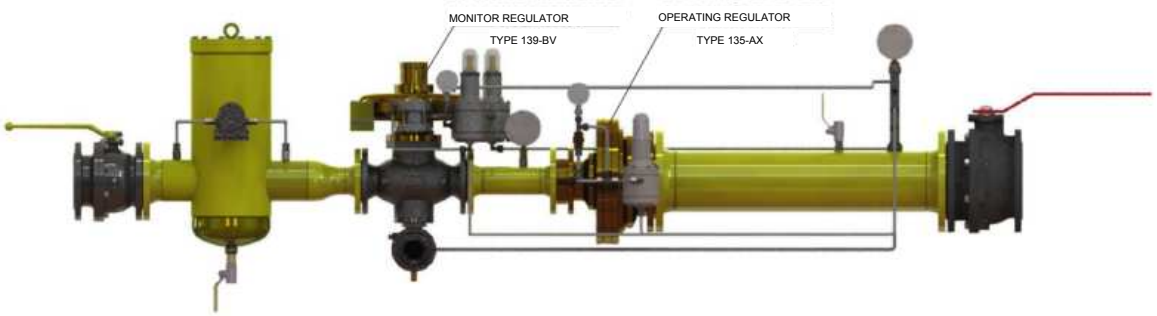

operation

Without gas, 135-AX is closed: spring (2) presses diaphragm (1) onto seat (3); the pilot is closed. Gas enters chamber (1) through flange (4), acts on spring (5) and diaphragm (6), opening the regulator. p1 passes via port (7) to chamber (9) and the pilot. Pilot pressure positions diaphragm (1) to hold p2. Rising p2 closes the regulator; falling p2 reverses this. The normally closed valve equalizes pressure across the diaphragm during commissioning or after servicing the regulator or pressure-reducing

line.

DIAGRAM

No.	NAME	Pos.	NAME
1.	diaphragm	8.	cover
2.	spring	9.	Diaphragm chamber
3.	Regulator seat	10.	Seal
4.	Inlet flange	11.	Connecting plate
5.	Spring support	12.	Lower reducer plate
6.	Diaphragm valve	13.	Upper reducer plate
7.	Inlet-flange connection	14.	Outlet flange

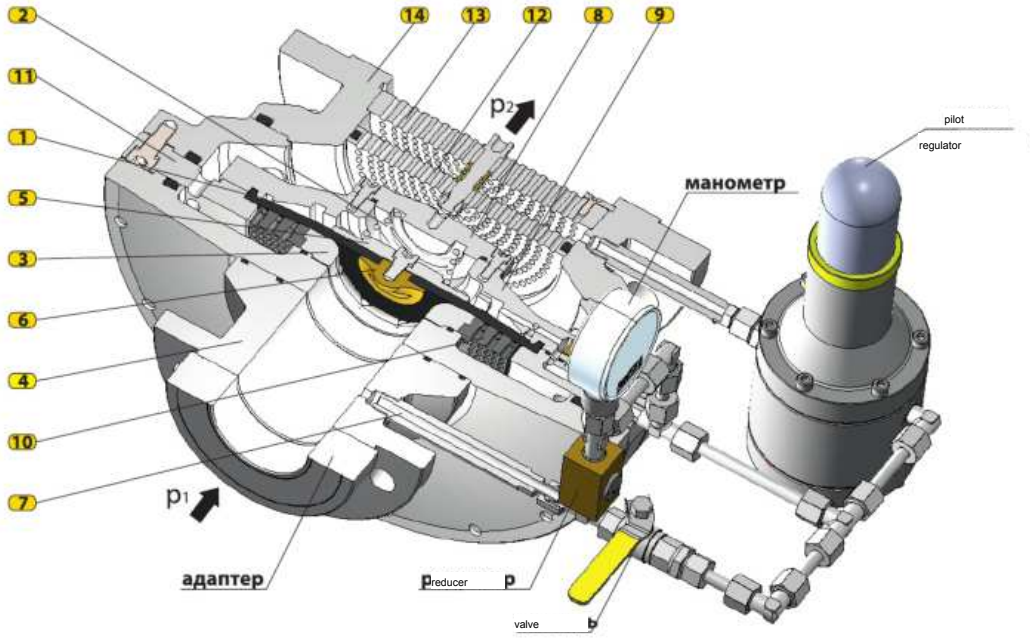

dimensions

DN / SIZE	Du	Di	ØA	L
25/80	25	80	220	220
40/100	40	100	290	245
50/150	50	150	315	260
65/150/200	65	150/200	350	270
80/200/250	80	200/250	410	310
100/300	100	300	480	350

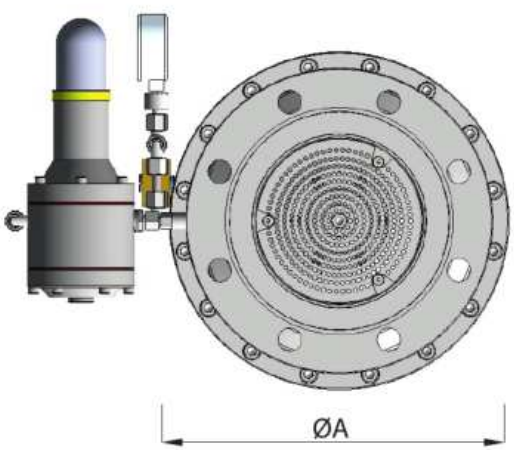

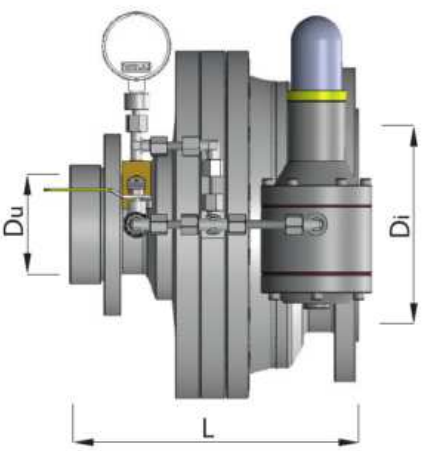

KG VALUE

DN	KG [m3/h·bar]
25/80	625
40/100	1660
50/150	2500
65/150 (200)	3720
80/200 (250)	5050
100/300	11300

FLOW RATE CALCULATION

Regulator sizing is based on inlet pressure (p1), outlet pressure (p2), and required flow Qmax.

p1 [bar] – inlet pressure (gauge)

p2 [bar] – outlet pressure (gauge)

Qmax [m³/h] – natural gas flow

1. $\frac{p2+1}{p1+1} \geq 0,5$

$$KG = \frac{Qmax}{\sqrt{(p2+1)(p1-p2)}}$$

2. $\frac{p2+1}{p1+1} < 0,5$

$$KG = \frac{2Qmax}{p1+1}$$

From the calculated KG, select the regulator size with the next higher KG value in the table. Ensure gas velocity at the regulator outlet flange does not exceed 180 m/s.

Flow-rate values are given in Nm³/h and apply to natural gas with density ρ = 0.78 kg/Nm³. For other gases, the table flow rates may be corrected by factor f = √(0.6/d). The correction factor (f) and relative density (d) for the most commonly used substances are listed in the table.

SUBSTANCE	RELATIVE DENSITY (d)	CORRECTION FACTOR (f)
air	1	0.77
азот	0.97	0.786
propane	1.57	0.62
butane	2,09	0.53
natural gas	0.6	1
CO_2	1.52	0.63

ACCURACY CLASSES

DN	P_2 (bar)	AC	SG
25 ÷ 100	0,02÷0,05	10	20
	0,05÷0,2	5	10
	> 0,2	2,5	5

Axial pressure regulators type 135-AX comply with SRPS EN 334. The 135-AX design is protected by the Federal Institute of Intellectual Property. The manufacturer reserves the right to change the product's technical data to improve

SERIES
130

PILOT-OPERATED REGULATORS

LOW AND MEDIUM PRESSURE

pressure regulators

WITH SAFETY SHUT-OFF VALVE

Type:137-BV



parameters

Inlet pressure: p1 = max. 8 (12) bar

Outlet pressure: p2 = 0.01–4 bar

Sizes: DN40–DN150 PN16, ANSI 150

climatic version: U and KhL (down to -60 °C)

application

natural gas, propane-butane

AIR, NITROGEN AND TECHNICAL GASES

installation and purpose

Pressure regulator type 137 is pilot-operated and maintains stable outlet pressure p2 within accuracy class AC regardless of changes in inlet pressure p1 or gas flow. Impulse lines V convey gas at p2 to the pilot and regulator; their interaction maintains the preset outlet pressure.

Regulator type 137-BV has an integral SSV. On request, it may have an SSV tripped only by high outlet pressure (-V) or by both high and low outlet pressure (-V/NP). The regulator must operate with clean gas; install a filter upstream.

Mount the regulator vertically on a horizontal gas line.

I inlet shut-off valve
filter
III pressure regulator type: 137-BV
IV safety valve
V vent valve

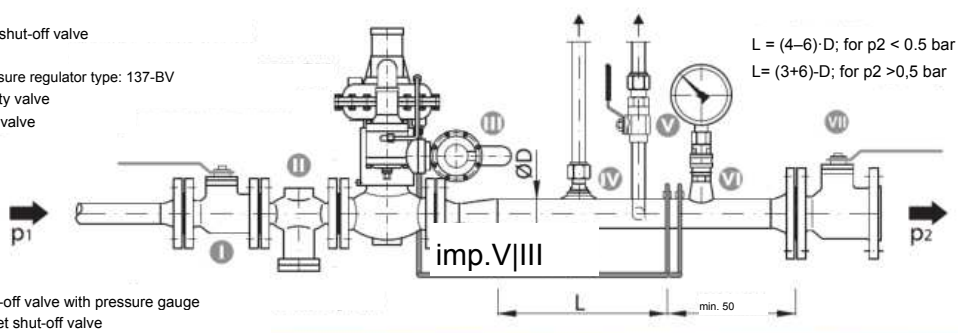

VI shut-off valve with pressure gauge
VII outlet shut-off valve

Initially with no gas, regulator 137 is closed: spring (12) presses plug (4) onto seat (2). SSV plug (14) opens passage (5); pilot is open. Gas at p1 opens plug (4) and reaches the pilot via line V. Pilot pressure moves diaphragm (9), stem and plug (4) to hold p2 as p1 or flow changes. Higher p2 throttles the pilot so spring (12) closes the regulator; lower p2 reverses it. Diaphragm (7) balances stem force. Set p2 with the pilot screw and locknut. If diaphragm (9) ruptures, spring (12) closes plug (4).

SSV OPERATION, REGULATORS DN40–DN80

When pressure exceeds the SSV trip setting, its diaphragm mechanism rises, pulls lever (24) and releases latch tooth (23). Sleeve (21) and stem (16) are released; stem spring (22) presses plug (14) onto seat (2). High-pressure tripping acts against HP spring (19), set by HP nut (18). For low pressure, LP spring (17) moves the mechanism down; lever (24) releases the latch and trips the SSV. LP spring (17) is set by LP nut (18). Reset the SSV manually after removing the cause

as follows:

Unscrew reset handle 26 from SSV body 15, turn it over and screw it onto SSV stem 16. Slowly pull handle 26 and hold it for several seconds until SSV pressure equalizes. Then pull handle 26 fully; stem 16 must latch in the reset position. The SSV is reset. Unscrew handle 26, turn it over and screw it back into body 15.

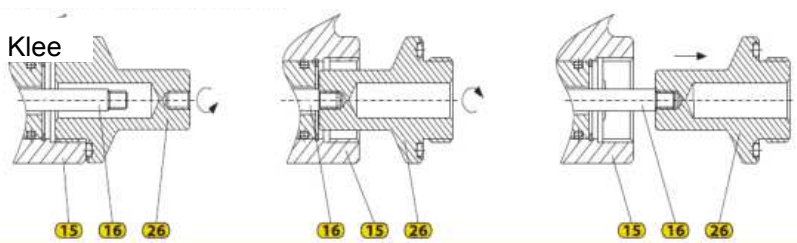

SSV OPERATION, REGULATORS DN100–DN150

Gas at p2 reaches the SSV pilot through the impulse line. If p2 is too high, pressure on diaphragm (a) overcomes spring (b) and moves pilot stem (c); pusher (d) acts on gear (e). Gear (e) turns, balls (f) enter the groove and spring-loaded stem (g) presses plug (h) onto the seat, stopping gas. If p2 is too low, spring (i) moves diaphragm (a) and stem (c); pusher (d) acts on gear (e), balls (f) enter the groove and stem (g) presses plug (h) onto the seat. Reset the SSV manually after eliminating the cause.

as follows:

– close the inlet and outlet shut-off valves of the pressure-reducing line;

– turn the SSV reset wheel slightly counterclockwise to equalize pressure, then turn the wheel

fully (the SSV stem must latch);

– slowly open the pressure-reducing line inlet valve.

Pos.	Name	Material	9		diaphragm	Effbe	18.	LP adjusting nut	Steel St3ps; St3sp
pressure regulator			10.	Upper body	Al alloy AK9ch / Steel 20L	19.	HP spring	Spring steel wire
1.	regulator body	Steel 20L	11.	Lower diaphragm	Al alloy AK9ch / Steel 20L	20.	HP adjusting nut	Steel St3ps; St3sp
2.	seat	Aluminium	12.	spring	Spring steel wire	21.	Sleeve	Steel 08Kh18N10
3.	stem	Steel 08Kh18N10	13.	Nut	Steel	22.	Plug spring	Spring steel wire
4.	Plug	Aluminium	SSV			23.	Latch tooth	Steel 20Kh13
5.	Guide	Aluminium	14.	valve disc	Brass LS-58-3	24.	lever	Steel 08; 08kp
6.	Diaphragm plate	Aluminium	15.	Lower SSV body	Al alloy AK9ch	25.	Upper SSV body	Al alloy AK9ch
7.	Balancing diaphragm	Effbe	16.	stem	Steel 08Kh18N10	26.	Reset handle	Brass LS-58-3
8.	Stem extension	Steel St3ps; St3sp	17.	LP spring	Spring steel wire	27.	Stem head	Brass LS-58-3

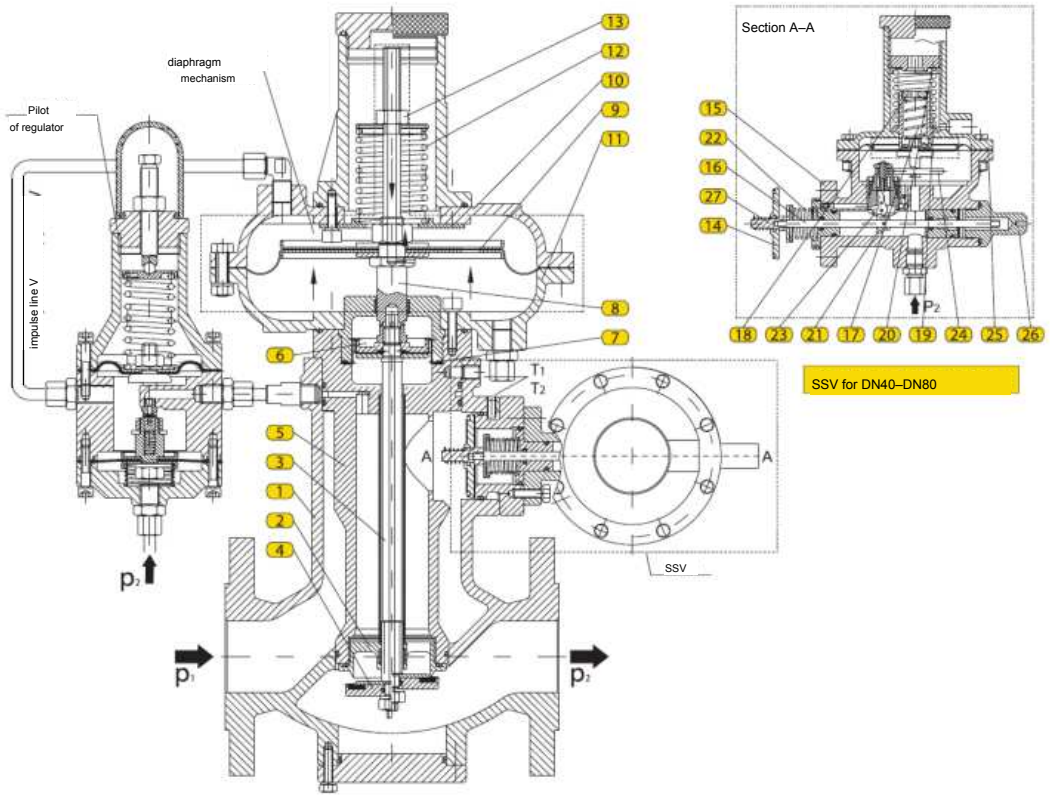

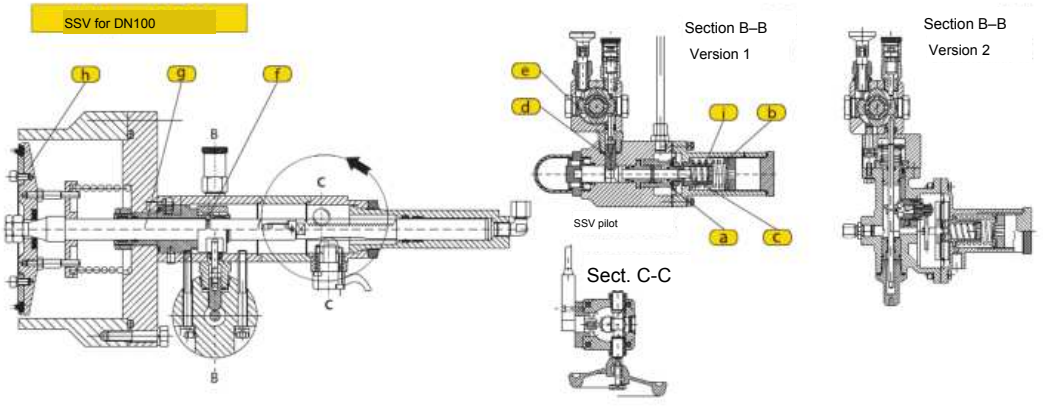

Pressure regulator type: 137-BV

inlet pressure (bar)	Outlet pressure (bar)											seat Ø42	
	0,02	0,05	0,1	0,2	0,4	0,7	1	2	3	4	6	8	12
0,2	520	415	305										
0,4	780	620	540	415									
0,6	850	805	790	680	595								
1	950	950	950	920	810	790							
2	950	950	1450	1450	1450	1390	1390						
3	950	950	1920	1920	1920	1920	1920	1850					
4	950	950	2500	2500	2500	2500	2500	2500	2500				
6	950	950	3400	3400	3400	3400	3400	3400	3400	3400			
8	950	950	3900	3900	3900	3900	3900	3900	3900	3900	3700		
10	950	950	4300	4300	4300	4300	4300	4300	4300	4300	4100	3900	
12	950	950	4900	4900	4900	4900	4900	4900	4900	4900	4900	4600	
16	-	-	-	-	-	-	-	-	-	-	-	-	-
V = 180 m/s	960	987	1035	1128	1320	1605	1880	2820	3760	4700	6580	8460	-

KG=980

DN40

inlet pressure (bar)	Outlet pressure (bar)											seat Ø54	
	0,02	0,05	0,1	0,2	0,4	0,7	1	2	3	4	6	8	12
0,2	1150	905	574										
0,4	1450	1400	1210	820									
0,6	1610	1540	1520	1320	850								
1	1780	1780	1690	1520	1410	1210							
2	1780	1780	2480	2150	1910	1805	1720						
3	1780	1780	3120	2710	2350	2280	2150	1980					
4	1780	1780	3900	3900	3900	3900	3900	3800	3200				
6	1780	1780	5500	5500	5500	5500	5500	5500	5500	5200			
8	1780	1780	6900	6900	6900	6900	6900	6900	6900	6900	6100		
10	1780	1780	8700	8700	8700	8700	8700	8700	8700	8700	8350	7050	
12	1780	1780	10060	10060	10060	10060	10060	10060	10060	10060	10060	9070	
16	1780	1780	13150	13150	13150	13150	13150	13150	13150	13150	13150	13150	11100
V = 180 m/s	1450	1490	1565	1690	1990	2420	2830	4250	5680	7158	10010	12964	18980

KG=1620

DN50

inlet pressure (bar)	Outlet pressure (bar)											seat Ø67	
	0,02	0,05	0,1	0,2	0,4	0,7	1	2	3	4	6	8	12
0,2	1785	1527	1210										
0,4	2150	2035	1815	1465									
0,6	2380	2295	2250	2070	1685								
1	2850	2850	2650	2470	2230	2030							
2	2850	2850	3495	3235	2905	2905	2810						
3	2850	2850	5085	4810	4375	4375	4275	4130					
4	2850	2850	5850	5850	5850	5850	5850	5700	4800				
6	2850	2850	8050	8050	8050	8050	8050	8050	8050	7500			
8	2850	2850	10150	10150	10150	10150	10150	10150	10150	10150	9300		
10	2850	2850	12550	12550	12550	12550	12550	12550	12550	12550	11975	10375	
12	2850	2850	14930	14930	14930	14930	14930	14930	14930	14930	14930	13685	
16	2850	2850	19525	19525	19525	19525	19525	19525	19525	19525	19525	19525	16550
V = 180 m/s	2300	2370	2480	2710	3160	3840	4520	6795	9078	11374	16000	20660	30100

KG=2290

DN65

inlet pressure (bar)	Outlet pressure (bar)											seat O82	
	0,02	0,05	0,1	0,2	0,4	0,7	1	2	3	4	6	8	12
0,2	2420	2150	1830										
0,4	2850	2670	2420	2110									
0,6	3150	3050	2980	2820	2520								
1	3920	3850	3610	3415	3050	2850							
2	3920	3850	4510	4320	3900	3900	3900						
3	3920	3850	7050	6920	6400	6400	6400	6280					
4	3920	3850	7800	7800	7800	7800	7800	7600	6400				
6	3920	3850	10600	10600	10600	10600	10600	10600	10600	9800			
8	3920	3850	13400	13400	13400	13400	13400	13400	13400	13400	12500		
10	3920	3850	16400	16400	16400	16400	16400	16400	16400	16400	15600	13700	
12	3920	3850	19800	19800	19800	19800	19800	19800	19800	19800	19800	18300	
16	3920	3850	25900	25900	25900	25900	25900	25900	25900	25900	25900	25900	22000
V = 180 m/s	3400	3500	3670	3995	4670	5674	6674	10025	13420	16810	23610	30580	44520

KG=3350

DN80

inlet pressure (bar)	Outlet pressure (bar)												seat Ø105
	0,02	0,05	0,1	0,2	0,4	0,7	1	2	3	4	6	8	12
0,2	4100	3850	2920										
0,4	5150	5100	4850	4720									
0,6	5780	5750	5610	5450	4890						KG=7490		
1	6600	6600	6450	6400	6220	5750							
2	6600	6600	8800	8800	8800	8720	8450						
3	6600	6600	12100	12100	12100	11950	11900	10500			DN100		
4	6600	6600	15100	15100	15100	15100	15100	14900	12100				
6	6600	6600	20800	20800	20800	20800	20800	20800	20800	18900			
8	6600	6600	26500	26500	26500	26500	26500	26500	26500	26500	23600		
10	6600	6600	33000	33000	33000	33000	33000	33000	33000	33000	32100	26050	
12	6600	6600	39000	39000	39000	39000	39000	39000	39000	39000	39000	38000	
16	6600	6600	50900	50900	50900	50900	50900	50900	50900	50900	50900	50900	43300
V = 180 m/s	5763	5933	6210	6780	7910	9610	11300	16950	22600	28250	39550	50850	75350

inlet pressure (bar)	Outlet pressure (bar)												seat Ø152
	0,02	0,05	0,1	0,2	0,4	0,7	1	2	3	4	6	8	12
0,2	9150	8650	6550										
0,4	11500	11350	10890	10650									
0,6	12800	12650	12600	12350	10850						KG=14900		
1	14800	14500	14200	14000	13900	13000							
2	14800	14500	18900	18900	26900	18850	18480						
3	14800	14500	27350	26900	26900	26900	26750	23600			DN150		
4	14800	14500	34100	34100	34100	34100	34100	33650	27350				
6	14800	14500	44560	44560	44560	44560	44560	44560	44560	41600			
8	14800	14500	57150	57150	57150	57150	57150	57150	57150	57150	52690		
10	14800	14500	68540	68540	68540	68540	68540	68540	68540	68540	68540	58960	
12	14800	14500	82250	82250	82250	82250	82250	82250	82250	82250	82250	82200	
16	14800	14500	114850	114850	114850	114850	114850	114850	114850	114850	114850	114850	98750
V = 180 m/s	12650	12980	13600	14850	17310	21030	24800	37250	49890	62310	87746	113120	165000

KG – flow coefficient

Maximum gas velocity at the regulator inlet shall be 50–60 m/s to meet the permitted velocity at the SSV inlet. At the regulator seat it shall not exceed 180 m/s. When selecting the regulator, choose the flow-rate value from the table, considering nominal bore diameter and inlet and

outlet pressure).

Compare the selected value with the lower table value (seat flow velocity up to 180 m/s) and use the smaller value.

Flow rates are given in Nm³/h and refer to natural

gas of relative density ρ = 0,78 kg/Nm³.

For other gases, table flow rates may be

corrected by factor f = √(0.6/d). The correction

factor (f) and relative density (d) for the most commonly used

used substances are given in the table.

SUBSTANCE	RELATIVE DENSITY (d)	CORRECTION FACTOR (f)
air	1	0.77
nitrogen	0.97	0.786
propane	1.57	0.62
butane	2,09	0.53
natural gas	0.6	1
CO_2	1.52	0.63

Built-in silencer

– noise reduction up to 10 dB (max. 12 dB)

– easy installation

– easy maintenance

- for low noise, it is enough to use the built-in silencer without installing an external silencer type: 450

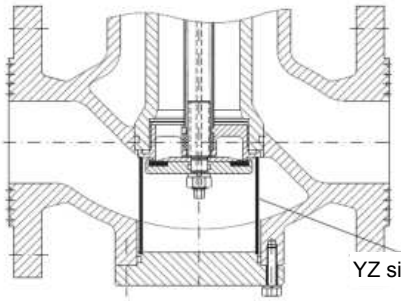

Built-in YZ silencer

Снижение шума с применением встроенного шумоглушителя

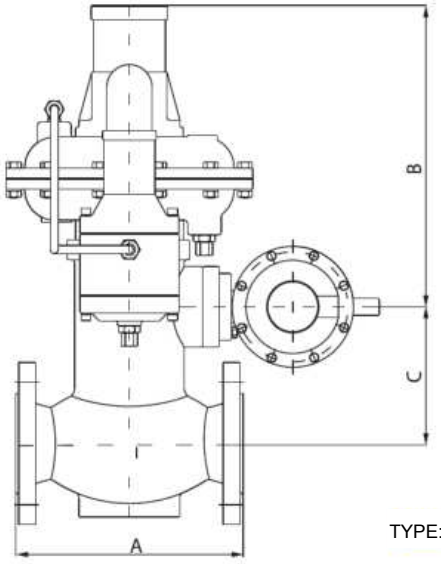

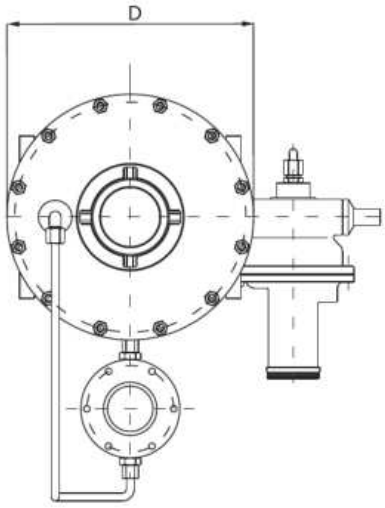

TYPE: 137-BV

dimensions

PN16

DN / размер	A	B	C	D
40	200	295	127	250
50	230	307	140	250
65	290	320	165	350
80	310	332	190	350
100	350	345	215	465
150	450	660	365	630

ACCURACY CLASSES

DN	P_2 (bar)	AC	SG
40 50	0,02÷1,0	10	20
65 80	0,1÷1,0	5	10
100 150	1,0÷4,0	2,5	5

	P_{bl} (bar)	AG
VP	0,04÷1,0	10
	1,0÷6,0	5
NP	0,008÷0,02	30
	0,02÷0,05	10

Pressure regulator type 137-BV comprises three main parts: regulator body, main diaphragm actuator and SSV. They are joined by threaded inserts T1 and T2 and can be removed quickly. Pressure regulators type 137-BV comply with EN 334:2010. The manufacturer reserves the right to modify the design for its

improvement.

SERIES
130

PILOT-OPERATED REGULATORS

LOW AND MEDIUM PRESSURE

pressure regulators

WITH OR WITHOUT SAFETY SHUT-OFF VALVE



Type: 139



Type: 139-BV

parameters

Inlet pressure: p1 = max. 25 bar

Outlet pressure: p2 = 0.02–12 bar

Sizes: DN25 - DN250 PN16/25, ANSI150

climatic version: U and KhL (down to -60 °C)

application

natural gas, propane-butane

air, nitrogen and industrial gases

INSTALLATION AND PURPOSE

Pressure regulator type 139 is pilot-operated and maintains outlet pressure p2 within accuracy class AC despite changes in inlet pressure p1 and gas flow. Impulse lines carry gas at p2 to the pilot and regulator, which jointly maintain the set outlet pressure. Type 139-BV has an integral safety shut-off valve (SSV) that trips on high or low p2. Use clean gas and an upstream filter. Standard flow direction is

from left to right.

Install the regulator horizontally or vertically.

I inlet shut-off valve
II filter
III Pressure regulator type: 139-BV
IV safety valve
V vent valve

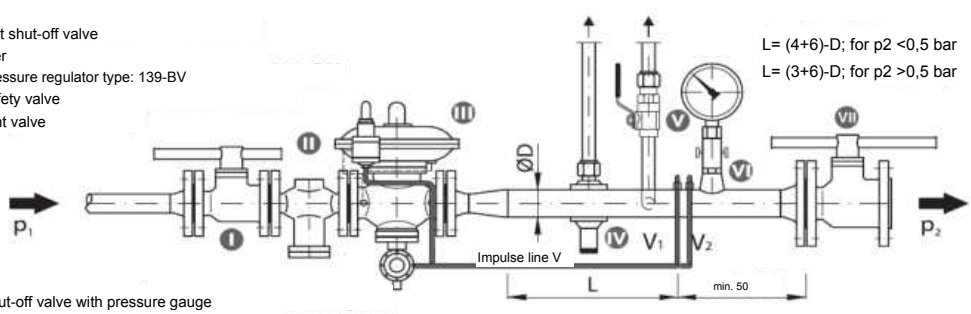

VI Shut-off valve with pressure gauge
VII Outlet shut-off valve

operation

The 139-BV pressure regulator consists of: - type 139 regulator; SSV; pre-pilot;

pilot regulator; throttle.

All regulator components are interconnected by impulse lines. Initially, with no gas in the pipeline, the regulator is unpressurised and closed: spring 7 holds valve disc 3 on the seat. The SSV disc is withdrawn from its seat, allowing gas to reach the valve disc; the pilot is open. When gas is admitted, it flows through body 1, opens valve disc 3 and enters the

impulse line V to pilot (or pre-pilot). If p1-p2 > 4 bar, a pre-pilot supplies pilot at about p2 + 0,5 bar through a calibrated spring; no extra setting is needed. Gas passes via the pilot regulator to the diaphragm actuator. Pressure differential and spring move the valve disc as p1 or flow changes, varying the opening to maintain p2. For smoother p2 control, adjust the throttle needle and locknut. Even fully closed, the throttle retains a passage between lower and upper

diaphragm mechanism.

Set the required outlet pressure p2 with the pilot adjusting screw, then lock it with the locknut and cover it with the transparent cap. If diaphragm 6 ruptures and the regulator fails, spring 7 moves the diaphragm mechanism and valve disc 3 closes the seat flow area; gas flow stops and the regulator closes. The operating manual contains a detailed description of the design, operation, adjustment and maintenance of the regulator and its components.

SSV OPERATION, REGULATORS DN25–DN65

Above the SSV trip pressure, its diaphragm mechanism rises, pulls lever 22 and releases locking tooth 18, sleeve 14 and stem 13; stem spring 19 then presses disc 11 onto seat 2. High-pressure tripping overcomes HP spring 20, set by HP adjusting nut 15. On low outlet pressure, LP spring 16 pushes the diaphragm down and, through lever 22, releases the latch and trips the SSV. The force of LP spring 16 is set

by LP adjusting nut 17.

Reset the SSV manually only, after determining and correcting the cause of its trip, as follows:

as follows:

Unscrew reset handle 21 from SSV body 12, reverse it and screw it onto SSV stem 13. Pull handle 21 slowly and hold it for several seconds until the pressure in the SSV equalises. Then pull handle 21 fully; stem 13 must lock in the reset position. The SSV is reset. Then unscrew the reset handle

21, turn it over and screw it back into body 12.

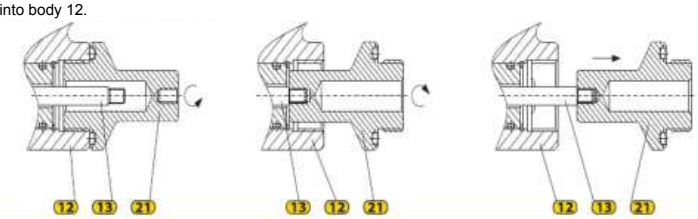

SSV OPERATION, REGULATORS DN80–DN250

Gas at p2 reaches the SSV pilot through the impulse line. If p2 rises above the limit, diaphragm (a) overcomes spring (b), moving pilot stem (c); pusher (d) turns gear (e). Balls (f) enter the groove and spring-loaded stem (g) presses SSV disc (B) onto the seat, cutting off gas. If p2 falls below the limit, spring (i) increases diaphragm force on stem (c); pusher (d) again turns gear (e), balls (f) enter the groove and stem (g) closes disc (B). Reset SSV manually after correcting the cause.

as follows:

– close the inlet and outlet shut-off valves of the pressure-reducing line;

– turn the SSV reset wheel slightly counterclockwise to equalize pressure, then turn the wheel

fully (the SSV stem must latch);

– slowly open the pressure-reducing line inlet valve.

Pos.	Name	Mat.	Pos.	Name	Mat.	Pos.	Name	Mat.
	pressure regulator		8.	Spring seat	Steel St3ps; St3sp	16.	LP spring	Steel St3ps; St3sp
1.	regulator body	Steel 20L	9.	Body	upper | Steel 20L	17.	LP adjusting nut	Steel St3ps; St3sp
2.	seat	Aluminium	10.	Diaphragm	lower | Steel 20L	18.	Latch tooth	Steel 20Kh13
3.	valve disc	Steel 08Kh18N10			SSV	19.	spring	Spring steel wire
4.	stem	Steel 08Kh18N10	11.	Valve disc	Brass LS-58-3	20.	HP spring	Spring steel wire
5.	cover	Aluminium	12.	Lower SSV body | Steel 20L		21.	Reset handle	Brass LS-58-3
6.	diaphragm	Effbe	13.	Stem	Steel 08Kh18N10	22.	lever	Steel 08; 08kp
7.	spring	Spring steel wire	14.	Lock sleeve	Steel 08Kh18N10	23.	Upper SSV body	Steel 20L
			15.	HP adjusting nut	Steel St3ps; St3sp	24.	Stem head	Brass LS-58-3

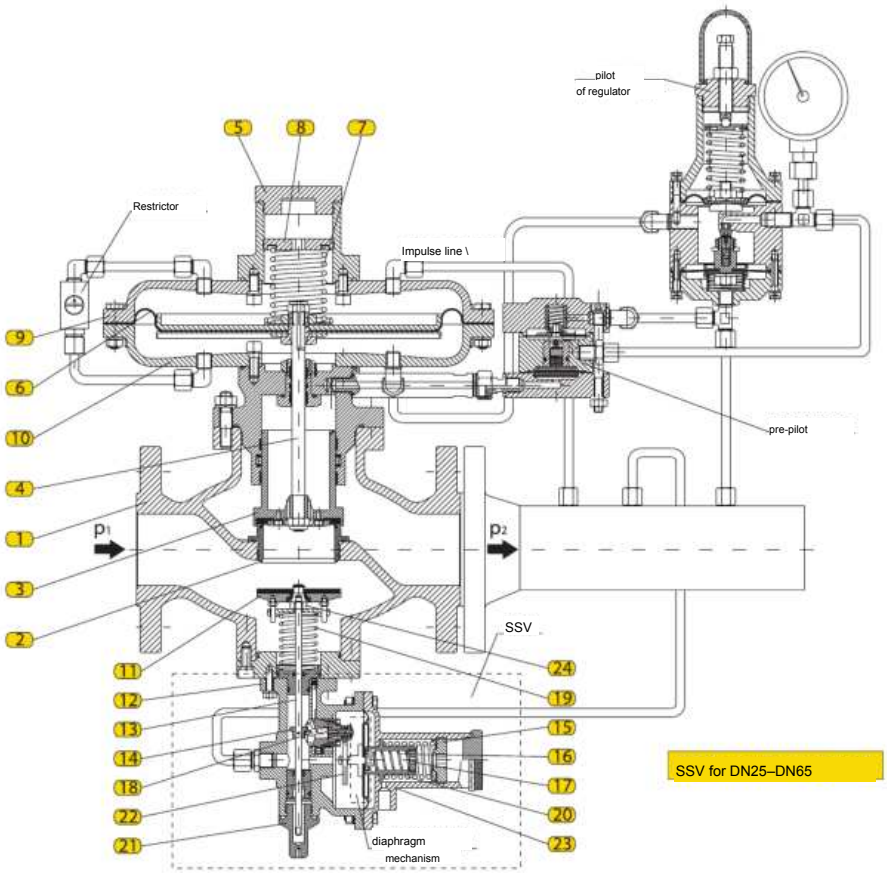

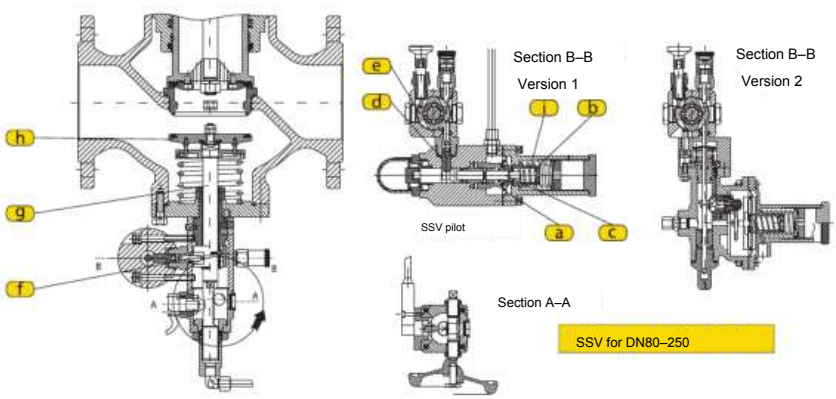

Pressure regulator type: 139, 139-BV

Inlet pressure (bar)	Outlet pressure (bar)																	
	0,02	0,05	0,1	0,2	0,3	0,5	0,8	1	1,5	2	3	4	5	6	7	8	10	12
0,8	268	263	260	250	240	-	-	-	-	-	-	-	-	-	-	-	-	-
1	268	263	305	295	270	210	-	-	-	-	-	-	-	-	-	-	-	-
1.5	268	263	305	295	400	390	360	330	-	-	-	-	-	-	KG=420			-
2	268	263	305	295	400	390	480	450	360	-	-	-	-	-				-
3	268	263	305	295	400	390	480	640	620	550	-	-	-	-	-	-	-	-
4	268	263	305	295	400	390	480	640	800	770	640	-	-	-	DN25			-
5	268	263	305	295	400	390	480	640	800	960	880	760	-	-				-
6	268	263	305	295	400	390	480	640	800	960	1100	1010	780	-	-	-	-	-
7	268	263	305	295	400	390	480	640	800	960	1100	1150	1100	950	-	-	-	-
8	268	263	305	295	400	390	480	640	800	960	1100	1150	1360	1200	905	-	-	-
9	268	263	305	295	400	390	480	640	800	960	1100	1150	1570	1470	1200	960	-	-
10	268	263	305	295	400	390	480	640	800	960	1100	1150	1740	1680	1450	1360	-	-
12	268	263	305	295	400	390	480	640	800	960	1100	1150	1740	2070	2020	1920	1500	-
14	268	263	305	295	400	390	480	640	800	960	1100	1150	1740	2070	2400	2350	2120	1630
15	268	263	305	295	400	390	480	640	800	960	1100	1150	1740	2070	2400	2560	2400	2320
16	268	263	305	295	400	390	480	640	800	960	1100	1150	1740	2070	2400	2710	2600	2400
18	268	263	305	295	400	390	480	640	800	960	1100	1150	1740	2070	2400	2710	3040	2850
20	268	263	305	295	400	390	480	640	800	960	1100	1150	1740	2070	2400	2710	3360	3260
25	268	263	305	295	400	390	480	640	800	960	1100	1150	1740	2070	2400	2710	3360	4150
V = 180 m/s	375	395	415	450	526	640	640	640	748	1130	1498	1805	2652	2652	2652	2652	3446	5025

Inlet pressure (bar)	Outlet pressure (bar)																	
	0,02	0,05	0,1	0,2	0,3	0,5	0,8	1	1,5	2	3	4	5	6	7	8	10	12
0,8	850	850	830	810	760	710	-	-	-	-	-	-	-	-	-	-	-	-
1	850	850	900	900	860	750	-	-	-	-	-	-	-	-	-	-	-	-
1.5	1400	1400	1400	1400	1400	1300	1200	1100	-	-	-	-	-	-	KG=1120			-
2	1750	1750	1750	1750	1750	1750	1750	1600	1500	-	-	-	-	-				-
3	1750	1750	1750	2100	2100	2100	2100	2100	2000	1900	-	-	-	-	-	-	-	-
4	1750	1750	1750	2100	2300	2300	2300	2300	2250	2200	2000	-	-	-	DN40			-
5	1750	1750	1750	2100	2300	2650	2650	2650	2650	2650	2450	2100	-	-				-
6	1750	1750	1750	2100	2300	2650	2900	2900	2900	2900	2900	2700	2200	-	-	-	-	-
7	1750	1750	1750	2100	2300	2650	2900	3400	3400	3400	3400	3400	3200	2400	-	-	-	-
8	1750	1750	1750	2100	2300	2650	2900	3400	3800	3800	3800	3800	3800	3200	2600	-	-	-
9	1750	1750	1750	2100	2300	2650	2900	3400	3800	4200	4200	4200	4200	4100	3800	2800	-	-
10	1750	1750	1750	2100	2300	2650	2900	3400	3800	4200	4700	4700	4700	4600	4400	4100	-	-
12	1750	1750	1750	2100	2300	2650	2900	3400	3800	4200	5400	5400	5400	5400	5100	5000	4500	-
14	1750	1750	1750	2100	2300	2650	2900	3400	3800	4200	5400	6000	6000	6000	5800	5600	5500	4800
15	1750	1750	1750	2100	2300	2650	2900	3400	3800	4200	5400	6000	6700	6700	6700	6700	6500	6200
16	1750	1750	1750	2100	2300	2650	2900	3400	3800	4200	5400	6000	6700	7100	7100	7100	7100	6800
18	1750	1750	1750	2100	2300	2650	2900	3400	3800	4200	5400	6000	6700	7900	7900	7900	7900	7800
20	1750	1750	1750	2100	2300	2650	2900	3400	3800	4200	5400	6000	6700	7900	8800	8800	8800	8800
25	1750	1750	1750	2100	2300	2650	2900	3400	3800	4200	5400	6000	6700	7900	8800	11000	11000	11000
V=180m/s	960	987	1030	1128	1218	1410	1690	1880	2350	2820	3760	4700	5640	6580	7610	8460	10530	12500

Inlet pressure (bar)	Outlet pressure (bar)																	
	0,02	0,05	0,1	0,2	0,3	0,5	0,8	1	1,5	2	3	4	5	6	7	8	10	12
	1310	1290	1283	1270	1110	-	-	-	-	-	-	-	-	-	-	-	-	-
1	1310	1290	1510	1480	1440	1400	-	-	-	-	-	-	-	-	-	-	-	-
1.5	1310	1290	1510	1480	1890	1840	1700	1600	-	-	-	-	-	-	KG=1680			-
2	1310	1290	1510	1480	1890	1840	2300	2150	1690	-	-	-	-	-				-
3	1310	1290	1510	1480	1890	1840	2300	3010	2920	2670	-	-	-	-	-	-	-	-
4	1310	1290	1510	1480	1890	1840	2300	3010	3800	3700	3100	-	-	-	DN50			-
5	1310	1290	1510	1480	1890	1840	2300	3010	3800	4100	3890	3400	-	-				-
6	1310	1290	1510	1480	1890	1840	2300	3010	3800	4100	5300	4850	3770	-	-	-	-	-
7	1310	1290	1510	1480	1890	1840	2300	3010	3800	4100	5300	6100	5800	5000	-	-	-	-
8	1310	1290	1510	1480	1890	1840	2300	3010	3800	4100	5300	6100	6500	5700	4300	-	-	-
9	1310	1290	1510	1480	1890	1840	2300	3010	3800	4100	5300	6100	7500	7000	5300	4600	-	-
10	1310	1290	1510	1480	1890	1840	2300	3010	3800	4100	5300	6100	8400	8300	7600	6800	-	-
12	1310	1290	1510	1480	1890	1840	2300	3010	3800	4100	5300	6100	8400	9800	9600	9300	7200	-
14	1310	1290	1510	1480	1890	1840	2300	3010	3800	4100	5300	6100	8400	9800	11500	11300	10250	7800
15	1310	1290	1510	1480	1890	1840	2300	3010	3800	4100	5300	6100	8400	9800	11500	12300	11420	9610
16	1310	1290	1510	1480	1890	1840	2300	3010	3800	4100	5300	6100	8400	9800	11500	12900	12300	10950
18	1310	1290	1510	1480	1890	1840	2300	3010	3800	4100	5300	6100	8400	9800	11500	12900	14300	13500
20	1310	1290	1510	1480	1890	1840	2300	3010	3800	4100	5300	6100	8400	9800	11500	12900	15400	15000
25	1310	1290	1510	1480	1890	1840	2300	3010	3800	4100	5300	6100	8400	9800	11500	12900	15400	18200
V=180m/s	1450	1490	1565	1690	1845	2130	2560	2830	3540	4250	5680	7158	8614	10010	11550	12964	16000	18980

Inlet pressure (bar)	Outlet pressure (bar)																	
	0,02	0,05	0,1	0,2	0,3	0,5	0,8	1	1,5	2	3	4	5	6	7	8	10	12
	1900	1900	1850	1850	1800	1300	-	-	-	-	-	-	-	-	-	-	-	-
1	1950	1950	1950	1900	1850	1650	-	-	-	-	-	-	-	-	-	-	-	-
1.5	2900	2900	2900	2900	2900	2800	2500	2200	-	-	-	-	-	-	KG=2500			-
2	3200	3200	3200	3200	3200	3100	3100	3100	2400	-	-	-	-	-				-
3	3200	3200	3900	3900	3900	3900	3800	3600	3500	3400	-	-	-	-	-	-	-	-
4	3200	3200	3900	3900	4900	4900	4900	4800	4600	4400	3900	-	-	-	DN65			-
5	3200	3200	3900	3900	4900	4900	6100	6100	6000	5900	5700	4300	-	-				-
6	3200	3200	3900	3900	4900	4900	6900	6900	6900	6900	6800	6200	4800	-	-	-	-	-
7	3200	3200	3900	3900	4900	4900	6900	6900	7900	7900	7900	7100	6200	5300	-	-	-	-
8	3200	3200	3900	3900	4900	4900	6900	6900	7900	8800	8800	8600	8400	7400	5800	-	-	-
9	3200	3200	3900	3900	4900	4900	6900	6900	7900	8800	9700	9700	9700	9300	7800	6100	-	-
10	3200	3200	3900	3900	4900	4900	6900	6900	7900	8800	10800	10800	10800	10600	10400	8400	-	-
12	3200	3200	3900	3900	4900	4900	6900	6900	7900	8800	12500	12500	12500	12500	12500	12000	10900	-
14	3200	3200	3900	3900	4900	4900	6900	6900	7900	8800	12500	14100	14100	14100	14100	13900	13000	12000
15	3200	3200	3900	3900	4900	4900	6900	6900	7900	8800	12500	14100	15200	15200	15200	15200	14600	13900
16	3200	3200	3900	3900	4900	4900	6900	6900	7900	8800	12500	14100	16400	16400	16400	16400	15900	15100
18	3200	3200	3900	3900	4900	4900	6900	6900	7900	8800	12500	14100	16400	18200	18200	18200	18200	18000
20	3200	3200	3900	3900	4900	4900	6900	6900	7900	8800	12500	14100	16400	18200	20200	20200	20200	20200
25	3200	3200	3900	3900	4900	4900	6900	6900	7900	8800	12500	14100	16400	18200	24500	24500	24500	24500
V=180m/s	2300	2370	2480	2710	2935	3386	4070	4520	5655	6795	9078	11374	13685	16000	18320	20660	25350	30100

Inlet pressure (bar)	Outlet pressure (bar)																	
	0,02	0,05	0,1	0,2	0,3	0,5	0,8	1	1,5	2	3	4	5	6	7	8	10	12
	2600	2600	2550	2400	2300	2000	-	-	-	-	-	-	-	-	-	-	-	-
1	3000	3000	2900	2900	2850	2600	-	-	-	-	-	-	-	-	-	-	-	-
1.5	3800	3800	3800	3800	3800	3700	3400	3200	-	-	-	-	-	-	KG=3400			-
2	4200	4200	4200	4200	4200	4300	4300	4300	3400	-	-	-	-	-				-
3	4200	4200	6050	6050	6050	6050	6050	6050	5800	5200	-	-	-	-	-	-	-	-
4	4200	4200	6050	6050	6050	6050	7600	7600	7600	7450	7000	-	-	-	DN80			-
5	4200	4200	6050	6050	6050	6050	7600	9800	9800	9800	9400	7600	-	-				-
6	4200	4200	6050	6050	6050	6050	7600	9800	10500	10500	10500	10000	7800	-	-	-	-	-
7	4200	4200	6050	6050	6050	6050	7600	9800	10500	11700	11700	11700	10800	8000	-	-	-	-
8	4200	4200	6050	6050	6050	6050	7600	9800	10500	11700	13300	13300	13300	12500	8200	-	-	-
9	4200	4200	6050	6050	6050	6050	7600	9800	10500	11700	15000	15000	15000	14700	14000	8400	-	-
10	4200	4200	6050	6050	6050	6050	7600	9800	10500	11700	15000	16500	16500	16500	16300	15100	-	-
12	4200	4200	6050	6050	6050	6050	7600	9800	10500	11700	15000	20500	20500	20500	19800	19600	16100	-
14	4200	4200	6050	6050	6050	6050	7600	9800	10500	11700	15000	20500	23000	23000	23000	22700	22000	18900
15	4200	4200	6050	6050	6050	6050	7600	9800	10500	11700	15000	20500	23000	24200	24200	24200	24000	22000
16	4200	4200	6050	6050	6050	6050	7600	9800	10500	11700	15000	20500	23000	24200	25400	25400	25400	24000
18	4200	4200	6050	6050	6050	6050	7600	9800	10500	11700	15000	20500	23000	24200	28200	28200	28200	28200
20	4200	4200	6050	6050	6050	6050	7600	9800	10500	11700	15000	20500	23000	24200	31100	31100	31100	31100
25	4200	4200	6050	6050	6050	6050	7600	9800	10500	11700	15000	20500	23000	24200	31100	39000	39000	39000
V=180m/s	3400	3500	3670	3995	4330	4995	6000	6674	8350	10025	13420	16810	20185	23610	27050	30580	37420	44520

Inlet pressure (bar)	Outlet pressure (bar)																	
	0,02	0,05	0,1	0,2	0,3	0,5	0,8	1	1,5	2	3	4	5	6	7	8	10	12
	5300	5300	5250	5000	4300	3800	-	-	-	-	-	-	-	-	-	-	-	-
1	5900	5900	5900	5800	5600	5000	-	-	-	-	-	-	-	-	-	-	-	-
1.5	7450	7450	7450	7450	7450	7480	6000	5300	-	-	-	-	-	-	KG=7600			-
2	7450	7450	8600	8600	8600	8600	8300	8100	6200	-	-	-	-	-				-
3	7450	7450	8600	8600	11500	11500	11400	11300	10500	9700	-	-	-	-	-	-	-	-
4	7450	7450	8600	8600	11500	11500	14100	14100	14100	13200	11500	-	-	-	DN100			-
5	7450	7450	8600	8600	11500	11500	14100	14100	17400	17400	14200	13400	-	-				-
6	7450	7450	8600	8600	11500	11500	14100	14100	17400	20600	20100	18100	14600	-	-	-	-	-
7	7450	7450	8600	8600	11500	11500	14100	14100	17400	20600	24150	24150	19100	15900	-	-	-	-
8	7450	7450	8600	8600	11500	11500	14100	14100	17400	20600	24150	26200	24100	22100	16800	-	-	-
9	7450	7450	8600	8600	11500	11500	14100	14100	17400	20600	24150	29900	29300	26400	23000	18100	-	-
10	7450	7450	8600	8600	11500	11500	14100	14100	17400	20600	24150	32000	32000	32000	31000	25400	-	-
12	7450	7450	8600	8600	11500	11500	14100	14100	17400	20600	24150	32000	38800	38800	37600	32000	28000	-
14	7450	7450	8600	8600	11500	11500	14100	14100	17400	20600	24150	32000	38800	44200	44200	43900	39000	30400
15	7450	7450	8600	8600	11500	11500	14100	14100	17400	20600	24150	32000	38800	44200	47400	47400	44000	37100
16	7450	7450	8600	8600	11500	11500	14100	14100	17400	20600	24150	32000	38800	44200	47400	50100	50100	43000
18	7450	7450	8600	8600	11500	11500	14100	14100	17400	20600	24150	32000	38800	44200	47400	56100	56100	52700
20	7450	7450	8600	8600	11500	11500	14100	14100	17400	20600	24150	32000	38800	44200	47400	56100	59100	59100
25	7450	7450	8600	8600	11500	11500	14100	14100	17400	20600	24150	32000	38800	44200	47400	56100	70100	70100
V=180m/s	5763	5933	6210	6780	7345	8475	10175	11300	14160	16950	22600	28250	33900	39550	45850	50850	63470	75350

inlet pressure (bar)	Outlet pressure (bar)																	
	0,02	0,05	0,1	0,2	0,3	0,5	0,8	1	1,5	2	3	4	5	6	7	8	10	12
0,8	11600	11600	11460	11020	8800	8600	-	-	-	-	-	-	-	-	-	-	-	-
1	12800	12600	12800	12600	11500	11300	-	-	-	-	-	-	-	-	-	-	-	-
1.5	16300	16300	16200	16000	15900	15800	15000	13100	-	-	-	-	-	-	KG=14920			-
2	16300	16300	16200	18800	18800	18800	18400	18400	16000	-	-	-	-	-				-
3	16300	16300	16200	18800	26100	26100	26000	25500	24500	23000	-	-	-	-	-	-	-	-
4	16300	16300	16200	18800	26100	26100	26000	32000	32000	31000	26400	-	-	-	DN150			-
5	16300	16300	16200	18800	26100	26100	26000	32000	38200	38200	36100	29500	-	-				-
6	16300	16300	16200	18800	26100	26100	26000	32000	38200	44100	44100	39400	32100	-	-	-	-	-
7	16300	16300	16200	18800	26100	26100	26000	32000	38200	44100	49200	49200	45100	35800	-	-	-	-
8	16300	16300	16200	18800	26100	26100	26000	32000	38200	44100	56000	56000	56000	49300	37200	-	-	-
9	16300	16300	16200	18800	26100	26100	26000	32000	38200	44100	56000	64500	64500	60400	57900	39400	-	-
10	16300	16300	16200	18800	26100	26100	26000	32000	38200	44100	56000	70500	70500	69200	66400	55800	-	-
12	16300	16300	16200	18800	26100	26100	26000	32000	38200	44100	56000	70500	82000	82000	82000	78000	61500	-
14	16300	16300	16200	18800	26100	26100	26000	32000	38200	44100	56000	70500	82000	91000	91000	86000	79000	66700
15	16300	16300	16200	18800	26100	26100	26000	32000	38200	44100	56000	70500	82000	91000	101000	101000	97000	80500
16	16300	16300	16200	18800	26100	26100	26000	32000	38200	44100	56000	70500	82000	91000	110500	110500	105700	94300
18	16300	16300	16200	18800	26100	26100	26000	32000	38200	44100	56000	70500	82000	91000	110500	123400	123400	116000
20	16300	16300	16200	18800	26100	26100	26000	32000	38200	44100	56000	70500	82000	91000	110500	123400	131500	131500
25	16300	16300	16200	18800	26100	26100	26000	32000	38200	44100	56000	70500	82000	91000	110500	123400	145000	145000
V=180m/s	12650	12980	13600	14850	16080	18580	22280	24800	31000	37250	49890	62310	75140	87746	100350	113120	139000	165000

inlet pressure (bar)	Outlet pressure (bar)																	
	0,02	0,05	0,1	0,2	0,3	0,5	0,8	1	1,5	2	3	4	5	6	7	8	10	12
0,8	21500	21500	20800	20100	17300	16100	-	-	-	-	-	-	-	-	-	-	-	-
1	22100	22100	21900	21000	19100	18100	-	-	-	-	-	-	-	-	-	-	-	-
1.5	25000	25000	28000	28000	28000	27800	24000	20000	-	-	-	-	-	-	KG=22300			-
2	25000	25000	28000	28000	33600	33600	34000	32400	29000	-	-	-	-	-				-
3	25000	25000	28000	28000	33600	33600	46000	46000	46000	45100	-	-	-	-	-	-	-	-
4	25000	25000	28000	28000	33600	33600	46000	46000	56000	56000	51200	-	-	-	DN200			-
5	25000	25000	28000	28000	33600	33600	46000	46000	56000	67000	67000	55300	-	-				-
6	25000	25000	28000	28000	33600	33600	46000	46000	56000	67000	86000	86000	63400	-	-	-	-	-
7	25000	25000	28000	28000	33600	33600	46000	46000	56000	67000	86000	97000	97000	76100	-	-	-	-
8	25000	25000	28000	28000	33600	33600	46000	46000	56000	67000	86000	106000	106000	98000	84000	-	-	-
9	25000	25000	28000	28000	33600	33600	46000	46000	56000	67000	86000	106000	116000	116000	113000	92000	-	-
10	25000	25000	28000	28000	33600	33600	46000	46000	56000	67000	86000	106000	134000	134000	128000	110000	-	-
12	25000	25000	28000	28000	33600	33600	46000	46000	56000	67000	86000	106000	134000	151000	151000	150000	121000	-
14	25000	25000	28000	28000	33600	33600	46000	46000	56000	67000	86000	106000	134000	151000	171000	171000	168000	129500
15	25000	25000	28000	28000	33600	33600	46000	46000	56000	67000	86000	106000	134000	151000	171000	198000	176000	101000
16	25000	25000	28000	28000	33600	33600	46000	46000	56000	67000	86000	106000	134000	151000	171000	198000	210000	138000
18	25000	25000	28000	28000	33600	33600	46000	46000	56000	67000	86000	106000	134000	151000	171000	198000	240000	240000
20	25000	25000	28000	28000	33600	33600	46000	46000	56000	67000	86000	106000	134000	151000	171000	198000	240000	274000
25	25000	25000	28000	28000	33600	33600	46000	46000	56000	67000	86000	106000	134000	151000	171000	198000	240000	290000
V=180m/s	20800	21410	22435	24480	26520	30620	36760	40870	51150	61450	82100	99850	120100	144600	165680	186750	229300	272200

KG – flow coefficient

Maximum gas velocity at the regulator inlet shall be 50–60 m/s to meet the permitted velocity at the SSV inlet. At the regulator seat it shall not exceed 180 m/s. When selecting the regulator, choose the flow-rate value from the table, considering nominal bore diameter and inlet and

outlet pressure).

Compare the selected value with the lower table value (seat flow velocity up to 180 m/s) and use the smaller value.

Flow-rate values are given in Nm³/h and apply to natural gas of relative density ρ = 0,78 kg/Nm³.

For other gases, table flow rates may be corrected by factor f = √(0.6/d). The correction factor (f) and relative density (d) for the most commonly used used substances are given in the table.

SUBSTANCE	RELATIVE DENSITY (d)	CORRECTION FACTOR (f)
air	1	0.77
nitrogen	0.97	0.786
propane	1.57	0.62
butane	2,09	0.53
natural gas	0.6	1
CO_2	1.52	0.63

Built-in silencer for

– noise reduction up to 10 dB (max. 12 dB)

– easy installation

– easy maintenance

- for low noise, it is enough to use the built-in silencer without installing an external silencer type: 450

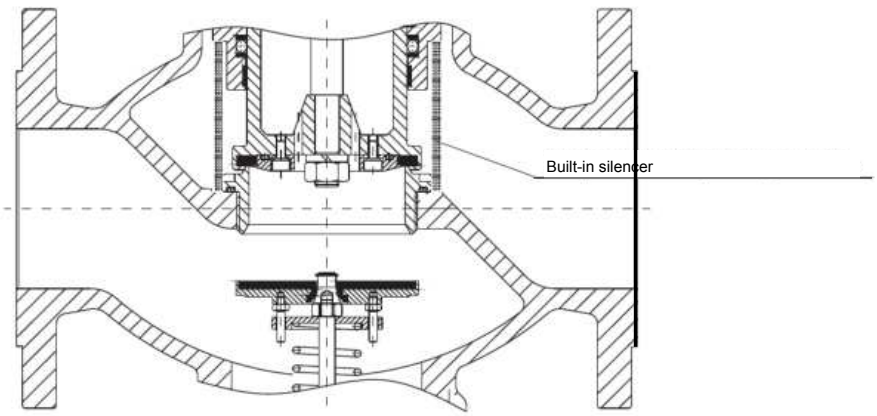

Снижение шума с применением встроенного шумоглушителя

ACCURACY CLASSES

DN	p_2 (bar)	AC	SG
25÷250	0,02÷0,05	10	30
	0,05÷0,2	5	10
	>0,2	2,5	10

DN	p_{bl} (bar)		AG
25÷200	VP	0,04÷1,0	10
		1,0÷6,0	5
		6,0÷16,0	1
	NP	0,008÷0,02	30
		0,02÷0,5	10
		0,5÷10	5

Za PN16/25

DN / SIZE	25	40	50	65	80	100	150	200
A	160	200	230	290	310	350	473	543/568
B	285	305	330	350	425	450	540	630
C	240	280	310	345	295	360	550	610
C_1	60	60	103	115	115	150	210	260
D	250	250	350	350	350	465	465	630
E	165	165	165	165	215	215	215	215

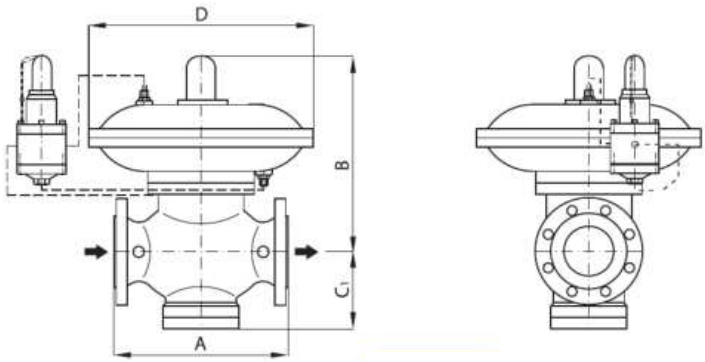

TYPE: 139

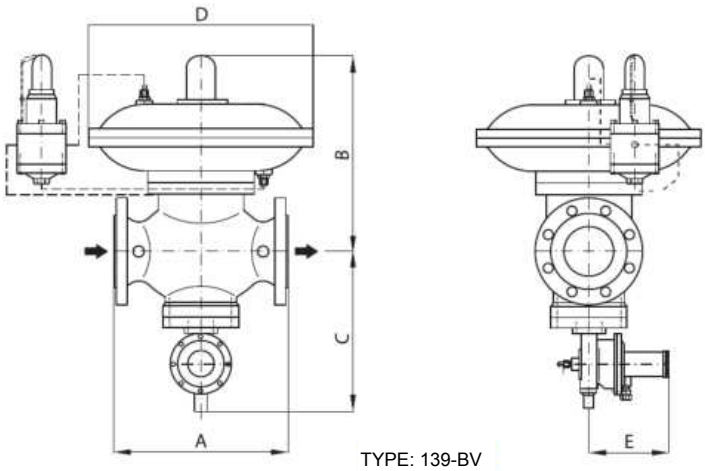

TYPE: 139-BV

Pressure regulators type 139 and 139-BV comply with EN 334:2010. The manufacturer reserves the right to modify the design for its

improvement.

SERIES
140

PILOT-OPERATED REGULATORS

HIGH PRESSURE



Type: 143



Type: 143-BV

pressure regulators

WITH OR WITHOUT SAFETY SHUT-OFF VALVE

parameters

Inlet pressure: p1 = max 100 bar

Outlet pressure: p2 = 1 + 40 bar

Sizes: DN25 - DN150

PN64/100, ANSI300/600

climatic version: U and KhL (down to -60 °C)

application

natural gas, propane-butane

air, nitrogen and industrial gases

INSTALLATION AND PURPOSE

Pressure regulator type 143 is pilot-operated and maintains p2 within accuracy class AC despite changes in p1 and gas flow. Impulse lines carry gas at p2 to the pilot and regulator, which jointly maintain the outlet setpoint. Type 143-BV has an integral SSV, available for high-pressure trip only or both high- and low-pressure trip. Use clean gas and an upstream filter. Standard left-hand version has flow left to right; a right-hand version is optional. Install vertically on a horizontal pipeline.

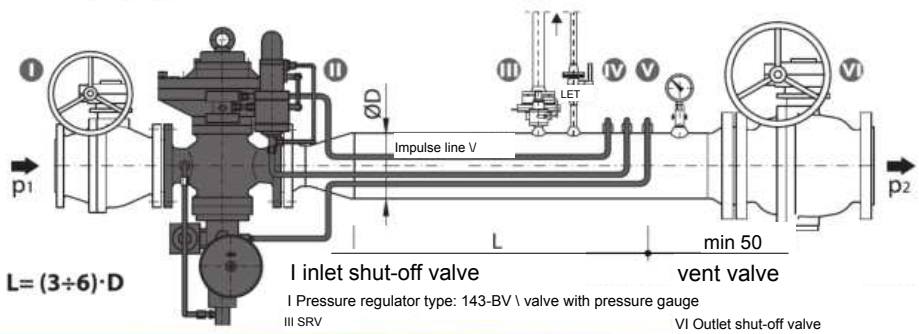

Without gas, 143-BV is closed: spring 4 presses diaphragm 3 onto its seat. SSV disc 8 is withdrawn, opening flow through seat 5; the pilot is closed. Gas passes body 1 and seat 5, overcomes spring 4, lifts diaphragm 3 and flows via the impulse line and throttle to the pilot and upper chamber. Upper pressure plus spring 4 closes the regulator; the pilot varies it to maintain outlet pressure. Set and lock the throttle needle for smooth p2 control. Even closed, a passage remains between diaphragm chambers.

Set the required outlet pressure p2 with the pilot adjusting screw, then secure it with the locknut and cover it with the transparent cap.

SSV OPERATION

Gas at outlet pressure p2 reaches the SSV pilot through the impulse line; this pilot is the SSV locking mechanism. If p2 exceeds the limit, pressure on diaphragm 7 overcomes spring 8 and shifts SSV pilot stem 12. Pusher 14 then acts on rotary key 16. As key 16 turns, locking balls 17 enter the groove and spring-loaded stem 10 presses SSV disc 8 onto the regulator seat, shutting off the gas supply.

When outlet pressure p2 falls below the permissible limit, spring 10 increases the force of diaphragm 7 on SSV pilot stem 12, moving stem 12. Pusher 14 then moves and presses rotary key 16. As key 16 turns, locking balls 17 enter the groove and stem 10, driven by its spring, pushes SSV plug 8 onto the regulator seat and shuts off the gas supply. The SSV may be reset only manually, after determining the causes of its trip and their

tripping, as follows:

– close the inlet and outlet shut-off valves of the pressure-reducing line;

- turn the SSV reset handwheel slightly counterclockwise to equalize pressure, then

turn the SSV reset handwheel fully (the SSV stem must latch);

– slowly open the pressure-reducing line inlet valve.

pressure regulator		
Pos.	Description	material
1.	body	Steel 30GSL
2.	Diaphragm cover	Steel St3ps; St3sp
3.	diaphragm	NBR80
4.	spring	Spring steel wire
5.	seat	Steel St3ps; St3sp
6.	Diaphragm seat	Steel St3ps; St3sp
7.	Insert	Plastic

SSV					
item	Description	Material | 16.		Rotary key	Steel 08; 08kp
7.	Diaphragm	EFFBE AG	17.	Locking ball	Bearing steel ShKh4
8.	VP spring	Spring steel wire	18.	Manual shut-off button	Plastic
9.	HP spring adjuster	Steel St3ps; St3sp	19.	Tapenka	Steel St3ps; St3sp
10.	MR spring	Spring steel wire	20.	Pilot cover	Steel 08; 08kp
11.	MR spring adjuster	Steel 08; 08kp	21.	Pilot ball	Bearing steel ShKh4
12.	Pilot stem	Steel 08; 08kp	22.	spring	Spring steel wire
13.	Stem guide	Steel 08; 08kp	23.	Cap	Plastic
14.	Pusher	Steel 08; 08kp	24.	Reset button	Steel 08; 08kp
15.	Pusher tip	Steel 08; 08kp	25.	stem	Steel 08; 08kp

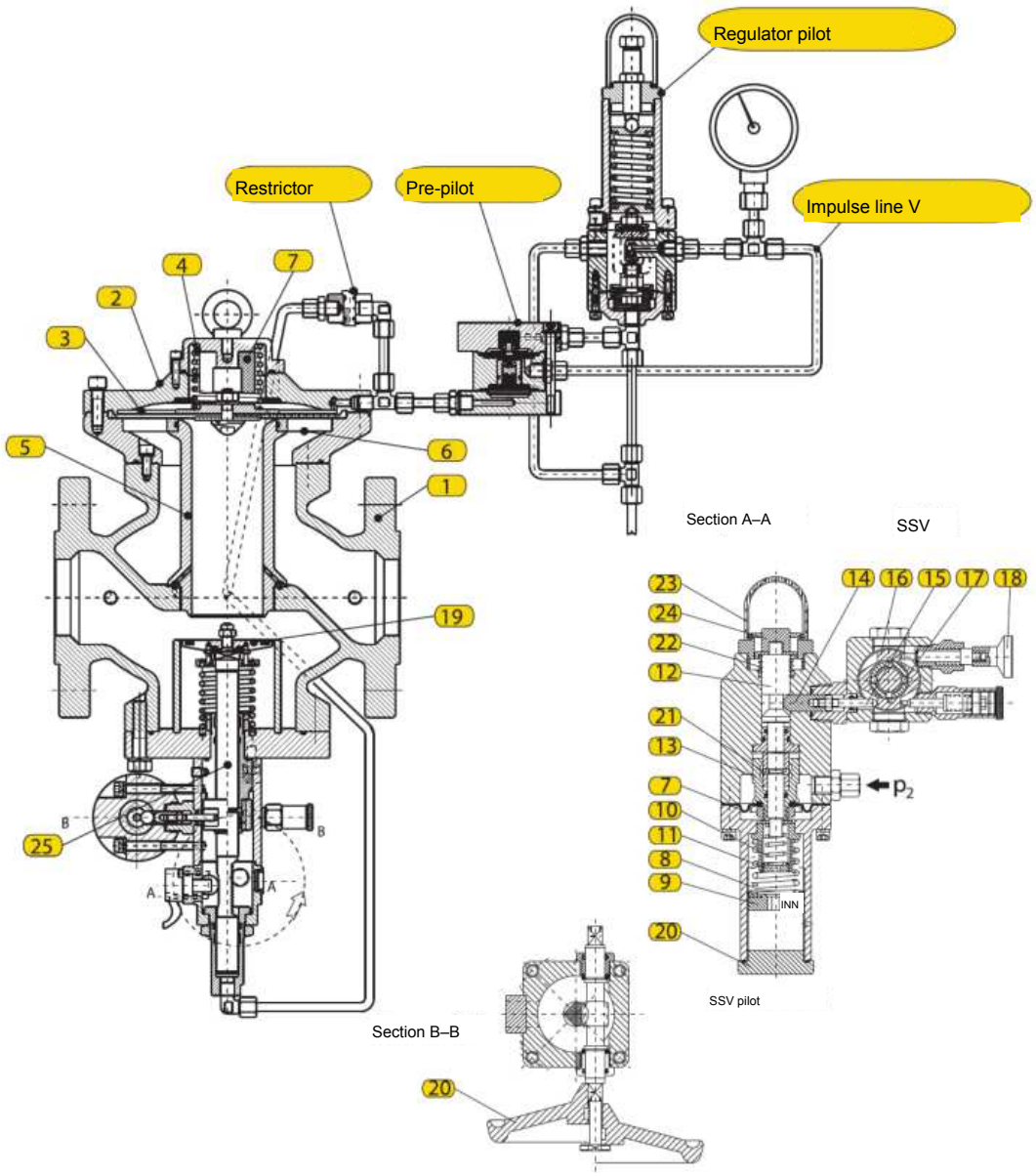

Pressure regulator type: 143, 143-BV

inlet pressure (bar)	Outlet pressure (bar)											
	1	2	4	6	8	10	15	20	25	30	35	40
2	505											
4	895	875								KG=420		
6	1250	1250	1110									
8	1605	1605	1597	1335						DN25		
10	1965	1965	1965	1890	1515							
15	2850	2850	2850	2850	2835	2650						
20	3750	3750	3750	3750	3750	3750	3195					
25	4640	4640	4640	4640	4640	4640	4515	3660				
30	5533	5533	5533	5533	5533	5533	5533	5173	4070			
40	7320	7320	7320	7320	7320	7320	7320	7320	7050	6285	4790	
50	9100	9100	9100	9100	9100	9100	9100	9100	9100	8890	8300	
60	11600	11600	11600	11600	11600	11600	11600	11600	11600	11600	11535	11200
75	13680	13680	13680	13680	13680	13680	13680	13680	13680	13680	13680	13680
100	18170	18170	18170	18170	18170	18170	18170	18170	18170	18170	18170	18170
V = 180 m/s	700	1050	1750	2450	3150	3850	5600	7350	9100	10850	12600	14350

inlet pressure (bar)	Outlet pressure (bar)											
	1	2	4	6	8	10	15	20	25	30	35	40
_	890											
4	2230	2185								KG=1120		
6	3125	3125	2820									
8	4015	4015	3995	3340						DN40		
10	4910	4910	4910	4722	3785							
15	7140	7140	7140	7140	7085	6620						
20	9370	9370	9370	9370	9370	9370	7985					
25	11600	11600	11600	11600	11600	11600	11300	9420				
30	13833	13833	13833	13833	13833	13833	13833	12935	10175			
40	18300	18300	18300	18300	18300	18300	18300	18300	17625	15715	11975	
50	22760	22760	22760	22760	22760	22760	22760	22760	22760	22222	20740	18070
60	27220	27220	27220	27220	27220	27220	27220	27220	27220	27220	26775	25560
75	34186	34186	34186	34186	34186	34186	34186	34186	34186	34186	34186	34115
100	45430	45430	45430	45430	45430	45430	45430	45430	45430	45430	45430	45430
V=180 m/s	1800	2700	4500	6300	8100	9900	14400	18900	23400	27900	32400	36900

inlet pressure (bar)	Outlet pressure (bar)											
	1	2	4	6	8	10	15	20	25	30	35	40
2	2020											
4	3570	3500								KG=1800		
6	5000	5000	4515									
8	6425	6425	6385	5345						DN50		
10	7855	7855	7855	7555	6060							
15	11425	11425	11425	11425	11335	10590						
20	14995	14995	14995	14995	14995	14995	12770					
25	18565	18565	18565	18565	18565	18565	18065	14635				
30	22135	22135	22135	22135	22135	22135	22135	20695	16280			
40	29275	29275	29275	29275	29275	29275	29275	29275	28200	25145	19160	
50	36415	36415	36415	36415	36415	36415	36415	36415	25915	35560	33185	28915
60	43555	43555	43555	43555	43555	43555	43555	43555	43555	43555	42840	40900
75	54700	54700	54700	54700	54700	54700	54700	54700	54700	54700	54700	54580
100	72690	72690	72690	72690	72690	72690	72690	72690	72690	72690	72690	72690
V = 180 m/s	2820	4230	7050	9870	12690	15510	22560	29610	36660	43710	50760	57810

inlet pressure (bar)	Outlet pressure (bar)											
	1	2	4	6	8	10	15	20	25	30	35	40
2	2895											
4	5120	5015								KG=2500		
6	7170	7170	6500									
8	9190	9190	9160	7660						DN65		
10	11260	11260	11260	10840	8690							
15	16380	16380	16380	16380	16250	15190						
20	21500	21500	21500	21500	21500	21500	18315					
25	26620	26620	26620	26620	26620	26620	25900	20980				
30	31740	31740	31740	31740	31740	31740	31740	27570	23350			
40	41975	41975	41975	41975	41975	41975	41975	41975	40450	36050	27470	
50	52200	52200	52200	52200	52200	52200	52200	52200	52200	51000	47600	41460
60	62450	62450	62450	62450	62450	62450	62450	62450	62450	62450	61425	58630
75	78430	78430	78430	78430	78430	78430	78430	78430	78430	78430	78430	78260
100	104225	104225	104225	104225	104225	104225	104225	104225	104225	104225	104225	104225
V = 180 m/s	4760	7140	11900	16660	21420	26180	38080	49980	61880	73780	85680	97580

inlet pressure (bar)	Outlet pressure (bar)											
	1	2	4	6	8	10	15	20	25	30	35	40
2	5300											
4	9370	9180								KG=4700		
6	13200	13200	11855									
8	16870	16870	16770	14025						DN80		
10	20620	20620	20620	19835	15900							
15	30000	30000	30000	29750	27800							
20	39360	39360	39360	39360	39360	39360	33530					
25	48730	48730	48730	48730	48730	48730	47450	38410				
30	58100	58100	58100	58100	58100	58100	58100	54320	42740			
40	76850	76850	76850	76850	76850	76850	76850	76850	74030	66000	50290	
50	95600	95600	95600	95600	95600	95600	95600	95600	95600	93340	87100	75900
60	114330	114330	114330	114330	114330	114330	114330	114330	114330	114330	112500	107340
75	143600	143600	143600	143600	143600	143600	143600	143600	143600	143600	143600	143275
100	190815	190815	190815	190815	190815	190815	190815	190815	190815	190815	190815	190815
V = 180 m/s	7220	10830	18050	25270	32490	39710	57760	75810	93860	111910	129960	148010

inlet pressure (bar)	Outlet pressure (bar)											
	1	2	4	6	8	10	15	20	25	30	35	40
2	8080											
4	14280	13990								KG=7900		
6	20000	20000	18063									
8	25705	25705	25545	21370						DN100		
10	31415	31415	31415	30225	24235							
15	45700	45700	45700	45700	45340	42360						
20	60000	60000	60000	60000	60000	60000	51100					
25	74255	74255	74255	74255	74255	74255	72250	58530				
30	88535	88535	88535	88535	88535	88535	88535	82800	65130			
40	117100	117100	117100	117100	117100	117100	117100	117100	112800	100570	76640	
50	145655	145655	145655	145655	145655	145655	145655	145655	145655	142300	132735	115660
60	174215	174215	174215	174215	174215	174215	174215	174215	174215	174215	171360	163570
75	218800	218800	218800	218800	218800	218800	218800	218800	218800	218800	218800	218330
	290760	290760	290760	290760	290760	290760	290760	290760	290760	290760	290760	290760
V = 180 m/s	11300	16950	28250	39550	50850	62150	90400	118650	146900	175150	203400	231650

inlet pressure (bar)	Outlet pressure (bar)											
	1	2	4	6	8	10	15	20	25	30	35	40
2	18118											
4	32025	31380								KG=14300		
6	44850	44850	40500									
8	57645	57645	57300	47930						DN150		
10	70455	70455	70455	67800	54400							
15	102500	102500	102500	102500	101700	95000						
20	134500	134500	134500	134500	134500	134500	114600					
25	166530	166530	166530	166530	166530	166530	162050	131260				
30	198600	198600	198600	198600	198600	198600	198600	185650	146060			
40	262600	262600	262600	262600	262600	262600	262600	262600	253000	225500	171900	
50	326700	326700	326700	326700	326700	326700	326700	326700	326700	319000	297700	259400
60	390700	390700	390700	390700	390700	390700	390700	390700	390700	390700	384300	367000
75	490700	490700	490700	490700	490700	490700	490700	490700	490700	490700	490700	490700
100	652080	652080	652080	652080	652080	652080	652080	652080	652080	652080	652080	652080
V = 180 m/s	25440	38160	63600	89040	114480	139920	203520	267120	330720	394320	457920	521520

KG – flow coefficient

Maximum gas velocity at the regulator inlet shall be 50–60 m/s to meet the permissible velocity at the SSV inlet. Gas velocity at the regulator seat shall not exceed 180 m/s. When selecting a regulator, take the flow value from the table, considering nominal diameter and inlet and outlet pressures.

Compare the selected value with the lower table value (seat velocity up to 180 m/s) and select the smaller value.

Flow values are given in Nm³/h and apply to natural gas with specific density ρ=0.78 kg/Nm³.

For other gases, the tabulated flow rates may be corrected using the coefficient f=√0.6/d. Correction factor (β) and relative density (d) for the most commonly used gases are given in the table.

SUBSTANCE	RELATIVE DENSITY (d)	CORRECTION FACTOR (f)
air	1	0.77
nitrogen	0.97	0.786
propane	1.57	0.62
butane	2,09	0.53
natural gas	0.6	1
CO_2	1.52	0.63

SIZE \ DN			25	40	50	65	80	100	150
A	(mm)	ANSI300	197	235	267	292	317	368	473
		ANSI600	210	251	286	311	337	394	508
		ANSI300/600 *	160	200	230	290	310	350	480
B		all classes	260	280	300	310	320	345	365
C			325	330	345	355	375	385	560
C_1			95	110	115	125	150	165	225

* - both-version dimensions

TYPE: 143

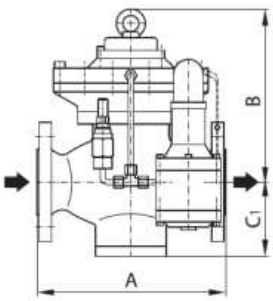

TYPE: 143-BV

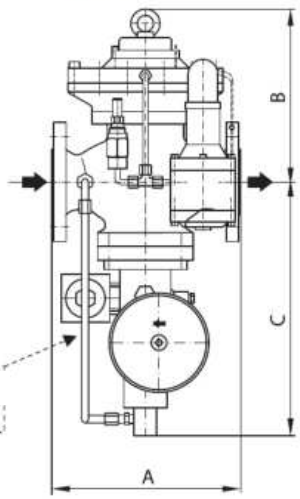

The SSV trip sensor is supplied together with the regulator at the customer's request.

ACCURACY CLASSES

DN	p_2 (bar)	AC	SG
25-200	1 ÷ 12	2.5	5
	12 ÷ 40	1.5	2.5

	p_{bi} (bar)	AG
VP	3 ÷ 30	2.5
NP	0.5 ÷ 12	5

Pressure regulators 143 and 143-BV meet EN 334:2010. The manufacturer reserves the right to modify the design for its improvement.

SERIES
140

PILOT-OPERATED REGULATORS

HIGH PRESSURE

pressure regulators

WITH OR WITHOUT SAFETY SHUT-OFF VALVE



Type: 149-BV

parameters

Inlet pressure: p1 = max 100 bar

Outlet pressure: p2 = 1 + 40 bar

Sizes: DN25–DN200

PN64/100, ANSI300/600

climatic version: U and KhL (down to -60 °C)

application

natural gas, propane-butane

air, nitrogen and industrial gases

INSTALLATION AND PURPOSE

Type 149 is a pilot-operated regulator with pre-pilot and pilot. It maintains outlet pressure p2 to accuracy class AC, irrespective of inlet pressure p1 and gas flow. Impulse lines feed gas at p2 to the pilot, pre-pilot and regulator. Type 149-BV has an integrated SSV, available for overpressure only (-V) or over/underpressure (-V/NP). Use clean gas and fit an upstream filter. Standard flow is left-to-right (left-hand version); a right-hand version is available on request.

Install the regulator vertically on a horizontal gas pipeline.

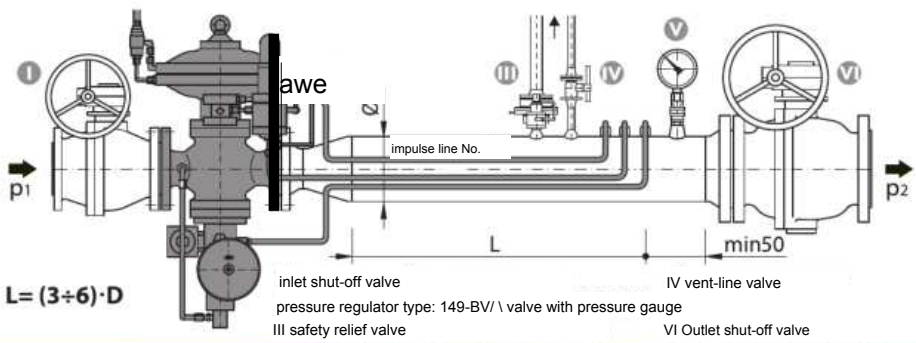

inlet shut-off valve IV vent-line valve

pressure regulator type: 149-BV/ \ valve with pressure gauge

III safety relief valve VI Outlet shut-off valve

operation

Pressure regulator 149-BV consists of:

- type 149 regulator;
- SSV;
- pre-pilot;
- pilot regulator;
- throttle.

All regulator components are interconnected by impulse lines.

With no gas, the regulator is unadjusted and closed: spring 6 holds plug 3 on the seat. SSV plug 9 is off its seat, allowing gas to the plug; the pilot is open. Gas enters body 1, opens plug 3 and flows through impulse line V1 and connection 13 to the pre-pilot. Above 25 bar inlet pressure, a pre-pilot regulator supplies the pilot at about 2 bar above outlet pressure p2. Its calibrated spring provides this pressure, so no further pre-pilot adjustment is required. From the pre-pilot, gas flows to the

pilot regulator.

From the pilot, gas enters the diaphragm actuator which, under

the pressure difference between its upper and lower chambers and the spring force, caused by changes in inlet pressure p2 or gas flow, moves the valve plug. This changes the valve flow area and maintains the specified outlet pressure p. For smoother control of outlet pressure p2, adjust the throttle flow area by turning the throttle needle and secure it with the locknut.

Even fully closed, the throttle needle leaves a gas passage between the diaphragm chambers. Set p2 with the pilot screw; secure it by locknut and clear cap. If diaphragm 5 ruptures, spring 6 moves the mechanism and plug 3 closes the seat, shutting the regulator. For impulse-gas heating, the pre-pilot has threaded 90/70 °C hot-water supply/return connections; heating is normally unnecessary. Design, operation, adjustment and maintenance are detailed in the

operating manual.

SSV OPERATION

Gas at p2 reaches the SSV pilot through the impulse line. Above the p2 limit, diaphragm pressure (a) overcomes spring (b), moving pilot stem (c); pusher (d) presses gear (e). The gear turns, balls (f) enter the groove and spring-driven stem (g) pushes SSV plug (h) onto the seat, cutting off gas. Below the p2 limit, spring (i) increases diaphragm (a) force on stem (c); pusher (d) presses gear (e). It turns, balls (f) enter the groove and stem (g) pushes plug (h) onto the seat, cutting off

the gas supply.

The SSV may be reset only manually, after determining and eliminating the cause of

tripping, as follows:

– close the inlet and outlet shut-off valves of the pressure-reducing line;

Turn the SSV reset handwheel slightly counterclockwise to equalize pressure, then turn it fully (the SSV stem must latch);

– slowly open the pressure-reducing line inlet valve.

Pos.	DESCRIPTION	MAT.	5.	DIAPH.		EREVE
	pressure regulator		6.	spring		Spring steel wire
1.	body	Steel 30GSL	7.	Upper diaphragm housing		Steel 30GSL
2.	Seat	Steel St3ps; St3sp	8.	Lower diaphragm housing		Steel 30GSL
3.	Shut-off valve	Steel 08Kh18N10	9.	Pre-pilot fitting		Steel St3ps; St3sp
4.	Stem	Steel 08; 08kp	10.	Cylinder		Steel 30GSL

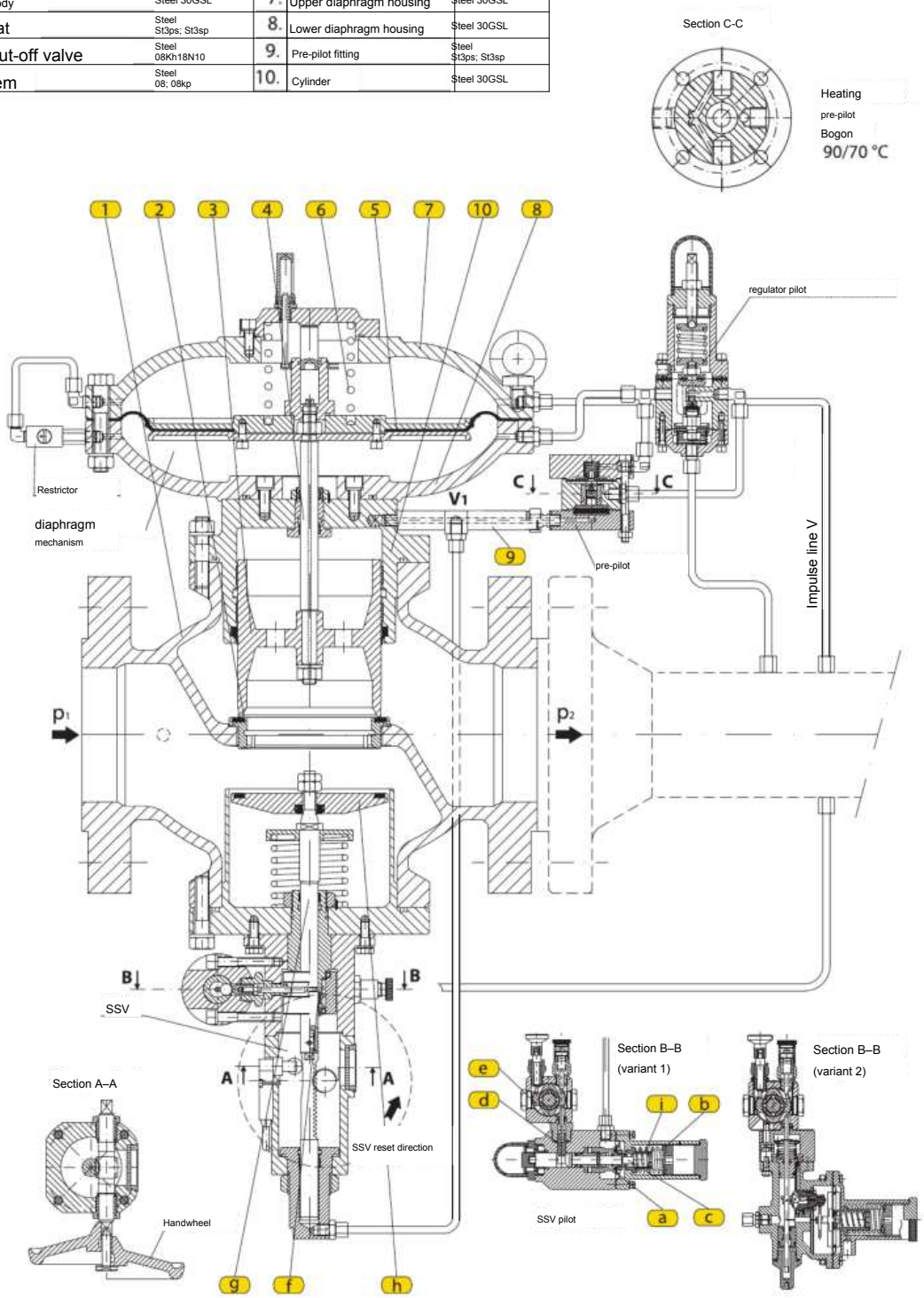

Pressure regulator type: 149, 149-BV

inlet pressure (bar)	Outlet pressure (bar)											
	1	2	4	6	8	10	15	20	25	30	35	40
	505											
4	895	875								KG=420		
6	1250	1250	1110									
8	1605	1605	1597	1335						DN25		
10	1965	1965	1965	1890	1515							
15	2850	2850	2850	2850	2835	2650						
20	3750	3750	3750	3750	3750	3750	3195					
25	4640	4640	4640	4640	4640	4640	4515	3660				
30	5533	5533	5533	5533	5533	5533	5533	5173	4070			
40	7320	7320	7320	7320	7320	7320	7320	7320	7050	6285	4790	
50	9100	9100	9100	9100	9100	9100	9100	9100	9100	8890	8300	
60	11600	11600	11600	11600	11600	11600	11600	11600	11600	11600	11535	11200
75	13680	13680	13680	13680	13680	13680	13680	13680	13680	13680	13680	13680
100	18170	18170	18170	18170	18170	18170	18170	18170	18170	18170	18170	18170
V = 180 m/s	700	1050	1750	2450	3150	3850	5600	7350	9100	10850	12600	14350

inlet pressure (bar)	Outlet pressure (bar)											
	1	2	4	6	8	10	15	20	25	30	35	40
2	890											
4	2230	2185								KG=1120		
6	3125	3125	2820									
8	4015	4015	3995	3340						DN40		
10	4910	4910	4910	4722	3785							
15	7140	7140	7140	7140	7085	6620						
20	9370	9370	9370	9370	9370	9370	7985					
25	11600	11600	11600	11600	11600	11600	11300	9420				
30	13833	13833	13833	13833	13833	13833	13833	12935	10175			
40	18300	18300	18300	18300	18300	18300	18300	18300	17625	15715	11975	
50	22760	22760	22760	22760	22760	22760	22760	22760	22760	22222	20740	18070
60	27220	27220	27220	27220	27220	27220	27220	27220	27220	27220	26775	25560
75	34186	34186	34186	34186	34186	34186	34186	34186	34186	34186	34186	34115
100	45430	45430	45430	45430	45430	45430	45430	45430	45430	45430	45430	45430
V = 180 m/s	1800	2700	4500	6300	8100	9900	14400	18900	23400	27900	32400	36900

Inlet pressure (bar)	Outlet pressure (bar)											
	1	2	4	6	8	10	15	20	25	30	35	40
2	2020											
4	3570	3500								KG=1800		
6	5000	5000	4515									
8	6425	6425	6385	5345						DN50		
10	7855	7855	7855	7555	6060							
15	11425	11425	11425	11425	11335	10590						
20	14995	14995	14995	14995	14995	14995	12770					
25	18565	18565	18565	18565	18565	18565	18065	14635				
30	22135	22135	22135	22135	22135	22135	22135	20695	16280			
40	29275	29275	29275	29275	29275	29275	29275	29275	28200	25145	19160	
50	36415	36415	36415	36415	36415	36415	36415	36415	25915	35560	33185	28915
60	43555	43555	43555	43555	43555	43555	43555	43555	43555	43555	42840	40900
75	54700	54700	54700	54700	54700	54700	54700	54700	54700	54700	54700	54580
100	72690	72690	72690	72690	72690	72690	72690	72690	72690	72690	72690	72690
V = 180 m/s	2820	4230	7050	9870	12690	15510	22560	29610	36660	43710	50760	57810

inlet pressure (bar)	Outlet pressure (bar)											
	1	2	4	6	8	10	15	20	25	30	35	40
2	2895											
4	5120	5015								KG=2500		
6	7170	7170	6500									
8	9190	9190	9160	7660						DN65		
10	11260	11260	11260	10840	8690							
15	16380	16380	16380	16380	16250	15190						
20	21500	21500	21500	21500	21500	21500	18315					
25	26620	26620	26620	26620	26620	26620	25900	20980				
30	31740	31740	31740	31740	31740	31740	31740	27570	23350			
40	41975	41975	41975	41975	41975	41975	41975	41975	40450	36050	27470	
50	52200	52200	52200	52200	52200	52200	52200	52200	52200	51000	47600	41460
60	62450	62450	62450	62450	62450	62450	62450	62450	62450	62450	61425	58630
75	78430	78430	78430	78430	78430	78430	78430	78430	78430	78430	78430	78260
100	104225	104225	104225	104225	104225	104225	104225	104225	104225	104225	104225	104225
V = 180 m/s	4760	7140	11900	16660	21420	26180	38080	49980	61880	73780	85680	97580

inlet pressure (bar)	Outlet pressure (bar)											
	1	2	4	6	8	10	15	20	25	30	35	40
2	5300											
4	9370	9180								KG=4700		
6	13200	13200	11855									
8	16870	16870	16770	14025						DN80		
10	20620	20620	20620	19835	15900							
15	30000	30000	30000	29750	27800							
20	39360	39360	39360	39360	39360	39360	33530					
25	48730	48730	48730	48730	48730	48730	47450	38410				
30	58100	58100	58100	58100	58100	58100	58100	54320	42740			
40	76850	76850	76850	76850	76850	76850	76850	76850	74030	66000	50290	
50	95600	95600	95600	95600	95600	95600	95600	95600	95600	93340	87100	75900
60	114330	114330	114330	114330	114330	114330	114330	114330	114330	114330	112500	107340
75	143600	143600	143600	143600	143600	143600	143600	143600	143600	143600	143600	143275
100	190815	190815	190815	190815	190815	190815	190815	190815	190815	190815	190815	190815
V = 180 m/s	7220	10830	18050	25270	32490	39710	57760	75810	93860	111910	129960	148010

inlet pressure (bar)	Outlet pressure (bar)											
	1	2	4	6	8	10	15	20	25	30	35	40
	8080											
4	14280	13990								KG=7900		
6	20000	20000	18063									
8	25705	25705	25545	21370						DN100		
10	31415	31415	31415	30225	24235							
15	45700	45700	45700	45700	45340	42360						
20	60000	60000	60000	60000	60000	60000	51100					
25	74255	74255	74255	74255	74255	74255	72250	58530				
30	88535	88535	88535	88535	88535	88535	88535	82800	65130			
40	117100	117100	117100	117100	117100	117100	117100	117100	112800	100570	76640	
50	145655	145655	145655	145655	145655	145655	145655	145655	145655	142300	132735	115660
60	174215	174215	174215	174215	174215	174215	174215	174215	174215	174215	171360	163570
75	218800	218800	218800	218800	218800	218800	218800	218800	218800	218800	218800	218330
	290760	290760	290760	290760	290760	290760	290760	290760	290760	290760	290760	290760
V = 180 m/s	11300	16950	28250	39550	50850	62150	90400	118650	146900	175150	203400	231650

inlet pressure (bar)	Outlet pressure (bar)											
	1	2	4	6	8	10	15	20	25	30	35	40
2	18118											
4	32025	31380								KG=14300		
6	44850	44850	40500									
8	57645	57645	57300	47930						DN150		
10	70455	70455	70455	67800	54400							
15	102500	102500	102500	102500	101700	95000						
20	134500	134500	134500	134500	134500	134500	114600					
25	166530	166530	166530	166530	166530	166530	162050	131260				
30	198600	198600	198600	198600	198600	198600	198600	185650	146060			
40	262600	262600	262600	262600	262600	262600	262600	262600	253000	225500	171900	
50	326700	326700	326700	326700	326700	326700	326700	326700	326700	319000	297700	259400
60	390700	390700	390700	390700	390700	390700	390700	390700	390700	390700	384300	367000
75	490700	490700	490700	490700	490700	490700	490700	490700	490700	490700	490700	490700
100	652080	652080	652080	652080	652080	652080	652080	652080	652080	652080	652080	652080
V = 180 m/s	25440	38160	63600	89040	114480	139920	203520	267120	330720	394320	457920	521520

KG – flow coefficient

Maximum gas velocity at the regulator inlet shall be 50–60 m/s to meet the permissible velocity at the SSV inlet. Gas velocity at the regulator seat shall not exceed 180 m/s. When selecting a regulator, take the flow value from the table for the nominal diameter and inlet/outlet pressures. Compare it with the lower table value corresponding to a seat velocity up to 180 m/s and select the smaller value.

Flow values are given in Nm³/h and apply to natural gas with specific density ρ=0.78 kg/Nm³.

For other gases, the tabulated flow rates may be corrected using the coefficient f=√0.6/d. Correction factor (β) and relative density (d) for the most commonly used gases are given in the table.

SUBSTANCE	RELATIVE DENSITY (d)	CORRECTION FACTOR (f)
air	1	0.77
nitrogen	0.97	0.786
propane	1.57	0.62
butane	2,09	0.53
natural gas	0.6	1
CO_2	1.52	0.63

dimensions

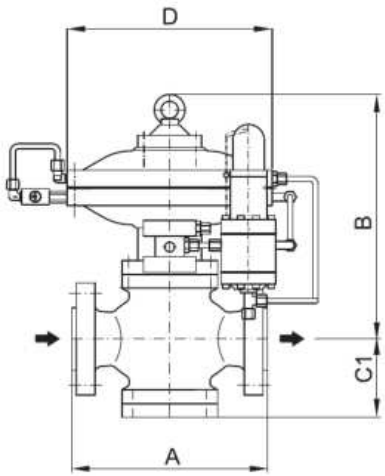

TYPE: 149

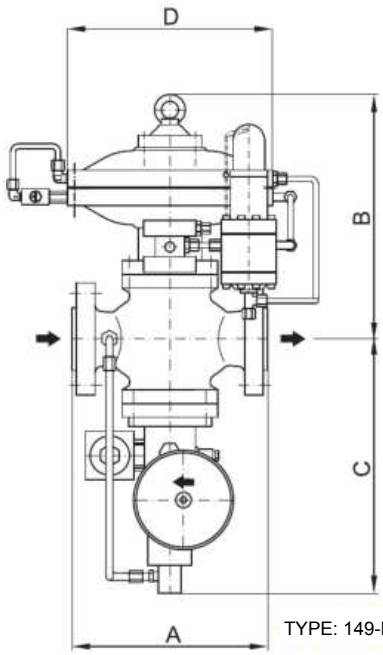

TYPE: 149-BV

SIZE \ DN			25	40	50	65	80	100	150	200
A	(mm)	ANSI300	197	235	267	292	317	368	473	568
		ANSI600	210	251	286	311	337	394	508	610
		ANSI300/600 *	160	200	230	290	310	350	450	600
B		all classes	280	300	335	350	390	430	540	597
C			325	330	345	355	375	385	560	607
C_1			95	110	115	125	150	165	225	265
D			250	300	300	300	415	415	500	500

%& - dimensions of both versions

ACCURACY CLASSES

DN	p_2 (bar)	AC	SG
25-200	1 ÷ 12	2.5	5
	12 ÷ 40	1.5	2.5

Built-in silencer

– noise reduction up to 10 dB (max. 12 dB)

– easy installation

– easy maintenance

- for low noise, it is sufficient

built-in silencer

without installing an external

silencer type: 450

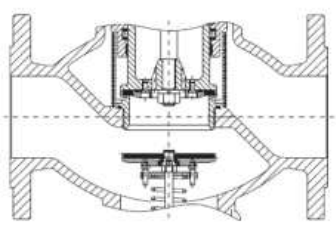

Pressure regulators 149 and 149-BV meet EN 334:2010. The manufacturer reserves the right to modify the design for its

improvement.

SERIES 210

SAFETY RELIEF AND BYPASS

DIRECT-ACTING SPRING VALVES

DIAPHRAGM SAFETY RELIEF VALVE

Type: 211 Junior





Type: 211

parameters

Opening pressure: po=10–600 mbar

Sizes: G1/2", G3/4", G1" PN6

climatic version: U and KhL (down to -60 °C)

application

natural gas, propane-butane

air, nitrogen and industrial gases

purpose

Type 211 diaphragm safety relief valve protects gas installations and equipment against overpressure. In gas facilities (GRS, GRP, pressure-reducing units, manifolds, etc.) it is installed downstream of the pressure regulator in the direction of gas flow. Its spring-and-diaphragm design provides high pressure-setting accuracy.

Two sizes are manufactured:

- type 211 Junior (G1/2") is recommended for low-capacity gas manifolds and stations, and
- type 211 (G3/4" and G1") is recommended for higher-capacity gas manifolds and stations.

Install the valve as shown in the figure below.

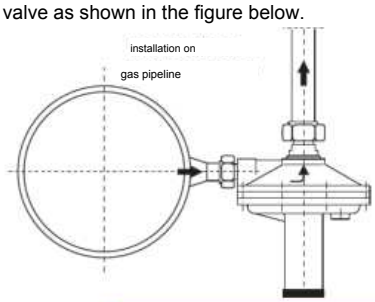

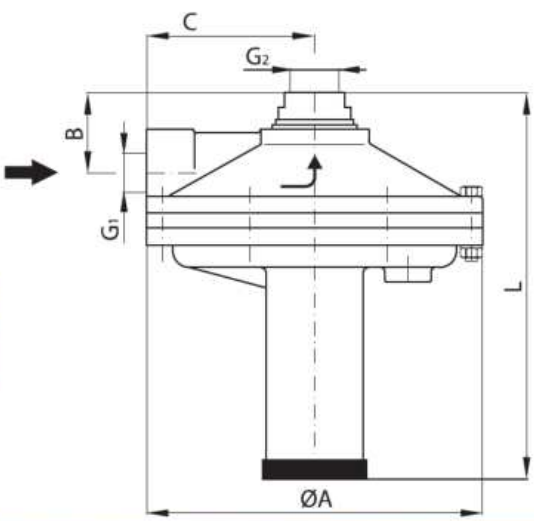

dimensions

DN	G1	G2	OA	B	C	L
			(mm)			
15	1/2"	3/4"	123	33,5	59	165
20	3/4"	1"	180	42,5	87	212

materials

Pos.	description	material
1.	spring housing	Aluminum alloy AK94
2.	body	Al alloy AKECh
3.	seat	Brass LS-58-3
4.	valve disc	Brass LS-58-3
5.	stem	Steel 08X18H10
6.	diaphragm	EREVE
7.	Seat spring	Spring steel wire
8.	Adjusting spring	Spring steel wire
9.	Plug	Polyethylene
10.	Sealing ring	NBR80

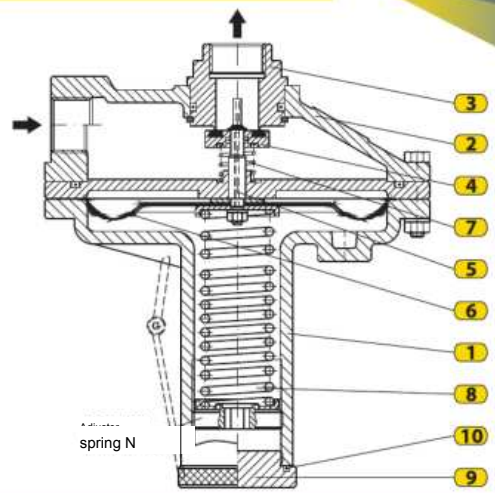

spring N

operation

The relief valve maintains the set pressure by venting gas to atmosphere when it opens. It vents until system pressure falls to the design value. In normal operation the safety valve is closed: disc 4 rests on seat 3 and the outlet is connected to the vent line. Adjusting spring 8 presses diaphragm 6

to its stop, pushing stem 5, while spring 7 presses disc 4 onto the seat and closes the valve. Seat spring 7

Spring 7 loads disc 4 in proportion to system pressure. Rising inlet pressure lets diaphragm 6 overcome spring 8 and move stem 5 and disc 4 against spring 7; gas vents to design pressure. Spring 8 then closes disc 4 on seat 3. The jet at stem 5 draws gas through its bore from housing 1, creating vacuum for fast opening and higher flow. Ring 10 and plug 9 seal the cavity. If the diaphragm ruptures, gas vents through the stem bore, so gas trains need no extra vent line. Spring 8 sets opening pressure.

by preloading the spring

After setting the required position of disc spring 7, the valve

Sealed

flow tables

G	$P_{откр}$ (bar)	AG
1/2"-3/4"	0,03÷0,08	5
3/4"-1"	>0,08÷0,6	2,5

Type: 211 junior G1/2"/G3/4"

Type: 211 G3/4"/G1"

col ae | ee | al | ee |

35	50	12	35	50	24,6
	75	22		75	66,4
	100	35		100	82,3
100	120	18	100	120	68,1
	150	32		150	99,0
	200	43		200	116,8
	300	74		300	143,5
200	240	28	200	240	120,7
	300	51		300	139,9
400	450	41	400	450	168,9
	500	93		500	181,0
500	550	51	500	550	185,7
	600	99		600	196,1

The safety valves comply with EN 4126-1. Diaphragm safety valve type 211 is protected by factory patent P-407/02. The manufacturer reserves the right to modify the design for improvement.

SERIES 210

SAFETY RELIEF AND BYPASS

DIRECT-ACTING SPRING VALVES

DIAPHRAGM SAFETY RELIEF VALVE



Type: 212

parameters

Opening pressure: popen = 0,5 - 5 bar

Sizes: G1/2"/G3/4", G3/4"/G1", G1"/G1¼" PN6

climatic version: U and KhL (down to -60 °C)

application

natural gas, propane-butane

air, nitrogen and industrial gases

purpose

Diaphragm safety valve type 212 protects gas installations and equipment against overpressure. On gas facilities (GDS, GRP, pressure-reduction units, gas trains, etc.) it is installed downstream of the pressure regulator in the gas-flow direction. The spring-and-diaphragm design ensures high pressure-control accuracy. Install the valve as shown below.

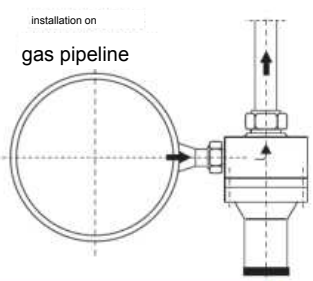

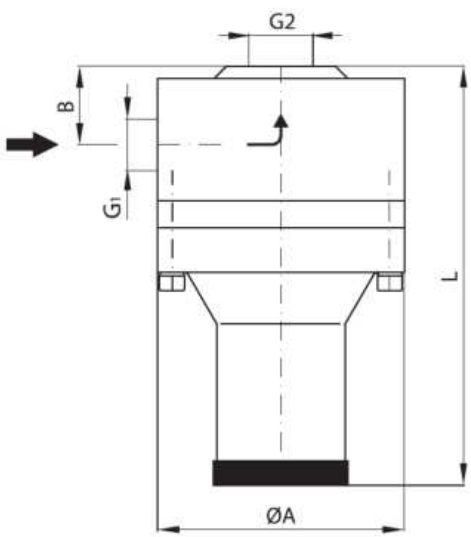

dimensions

DN	G1	G2	OA	B	L
			(mm)		
15	1/2"	3/4"	80	27	161
20	3/4"	1"	80	32	166
25	1"	5/4"	100	37	176

materials

Pos.	description	material
1.	Valve body	Aluminum alloy AK94
2.	valve disc	Brass LS-58-3
3.	stem	Steel 08X18H10
4.	diaphragm	EREVE
5.	spring housing	Al alloy AKECh
6.	Spring adjuster	Steel St3ps;St3sp
7.	Plug	Polyethylene
8.	Adjusting spring	Spring steel wire
9.	Seat spring	Spring steel wire
10.	Sealing ring	NBR80

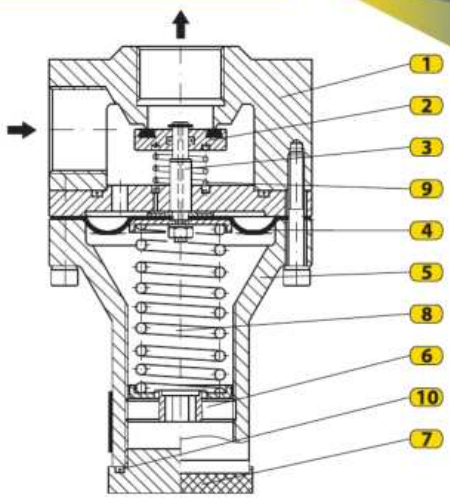

operation

The relief valve maintains the set pressure by venting gas to atmosphere when it opens. It continues venting until system pressure falls to the

design value.

Normally the valve is closed: disc 2 is seated. Spring 8 presses diaphragm 4 and stem 3; spring 9 holds disc 2 closed according to pressure. Rising pressure lets diaphragm 4 overcome spring 8 and move stem 3 and disc 2 against spring 9; gas vents to design pressure. Spring 8 returns stem 3 and closes disc 2. If the diaphragm ruptures, the ring retains gas, which vents through stem 3, so gas trains need no extra line. Opening pressure is set by spring 8 and adjuster 6. After setting the design value, the

The valve is sealed.

FLOW TABLES

G	$P_{откр}$ (bar)	AG
1/2"-3/4"	0,5÷1,0	5
3/4"-1" 1"-1¼"	>1,0÷5,0	2,5

Type: 212 G1/2"/G3/4"

$P_{откр}$ (mbar)	Давление при котором измерен расход (bar)	Расход прир. газа (нм³/ч)
0,6	0,7	33
0,8	1,0	42
1,0	1,2	74
2,0	2,5	272
4,0	4,5	328
5,0	6,0	464

Type: 212 G3/4"/G1"

$P_{откр}$ (mbar)	Давление при котором измерен расход (bar)	Расход прир. газа (нм³/ч)
0,6	0,7	41
0,8	1,0	52
1,0	1,2	81
2,0	2,5	290
4,0	4,5	457
5,0	6,0	573

The safety valves comply with EN 4126-1. The manufacturer reserves the right to modify the design for improvement.

SERIES 210

SAFETY RELIEF AND BYPASS

DIRECT-ACTING SPRING VALVES

SAFETY BYPASS VALVE



Type: 214

parameters :

Opening pressure: popen = 2 - 20 bar

Sizes: DN25 - DN80 PN16/25

climatic version: U and KhL (down to -60 °C)

application :

NATURAL GAS, PROPANE-BUTANE

air, nitrogen and industrial gases

PURPOSE

Safety bypass valve type 214 (hereinafter: the valve) protects gas equipment and installations against overpressure. When pressure reaches the maximum permissible value,

the valve opens and bypasses gas to another pipeline or vessel until

system pressure falls to the design value.

DIMENSIONS

SIZE \ DN		25	32	40	50	65	80
ØD	(mm)	25	32	40	50	65	80
A		220	220	230	235	250	270
L		160	180	200	230	290	310

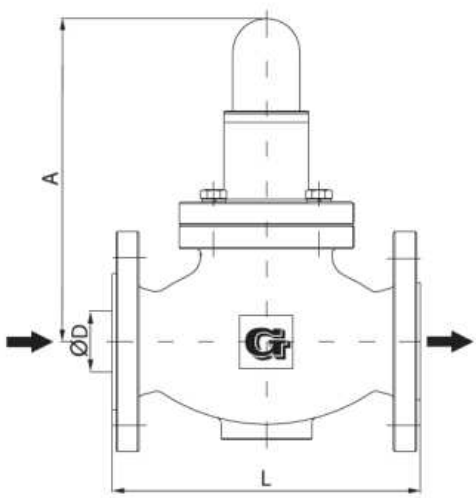

materials

Pos.	description	material
1.	Valve body	Steel 20/1
2.	seat	Steel St3ps;St3sp
3.	valve disc	Steel St3ps/St3sp
4.	spring	Spring steel wire
5.	cover	Steel St3ps;St3sp
6.	spring housing	Steel St3ps;St3sp
7.	Spring adjuster	Steel St3ps;St3sp
8.	Adjusting screw	Steel 08X18H10
9.	Cap	Polyethylene
10.	Sealing ring	NBR80

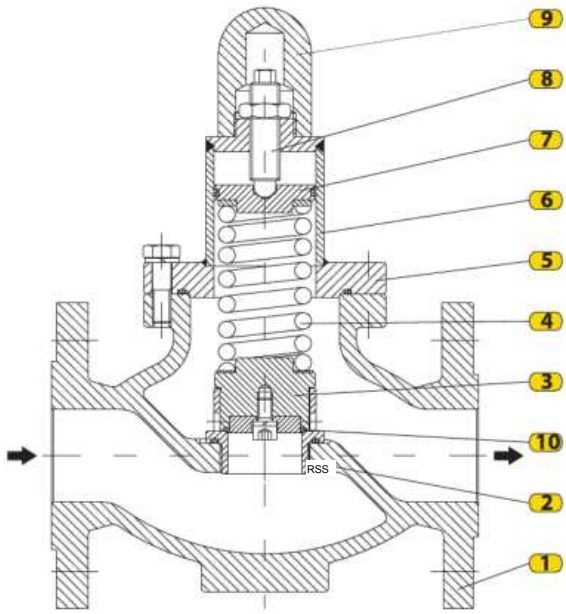

operation

When system pressure reaches the maximum permissible value, the safety bypass valve opens its disc and transfers a controlled quantity of gas. Gas is bypassed to another system or vessel until system pressure

falls to the design value.

In normal operation the bypass valve is closed: seal 10 on disc 2 is pressed against valve seat 2. Spring 4 overcomes the gas force on the opposite side of the disc and keeps the valve closed; it is set to a specified closing force. As inlet pressure and opening force rise, spring 4 compresses and the disc lifts from the seat. Gas flows out until pressure falls to the design value. Spring 4 then presses the disc back onto the seat and shuts off

gas flow.

Opening pressure popen is set with spring adjuster 7, which changes the force of spring 4. Seal the valve after adjustment.

Bypass valve type 214 is easy to install and service. It complies with EN 4126-1. The manufacturer reserves the right to modify the design for improvement.

SERIES
210

SAFETY RELIEF AND BYPASS

DIRECT-ACTING SPRING VALVES

safety relief valve



Type: 214-TG

parameters

Opening pressure: popen = 6 - 10 bar

Sizes: DN25 - DN65 PN25

climatic version: U and KhL (down to -60 °C)

application

LIQUEFIED PETROLEUM GAS AND OTHER LIQUID FLUIDS

purpose

Safety bypass valve type 214-TG primarily protects LPG installation systems and pumping stations used to fill vehicles and LPG cylinders, while maintaining constant pressure (popen = 6-10 kgf/cm²).

DIMENSIONS

SIZE \ DN		25	32	40
ØD	(mm)	25	32	40
A		220	220	230
L		160	180	200

On request, type 214-TG valve is made in other sizes and pressure differentials.

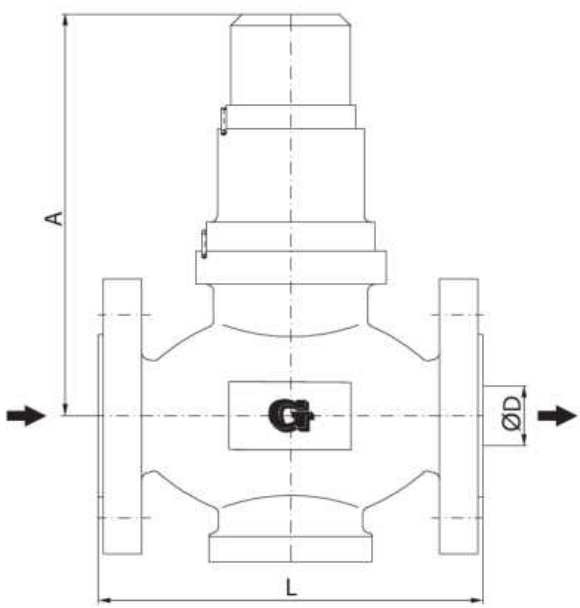

materials

Pos.	description	material
1.	Valve body	Steel 20L
2.	Injection nozzle	Brass LS-58-3
3.	Piston	Brass LS-58-3
4.	spring housing	Steel St3ps; St3sp
5.	spring	Spring steel wire
6.	Adjusting stem	Steel 08Kh18N10
7.	Cap	Aluminium

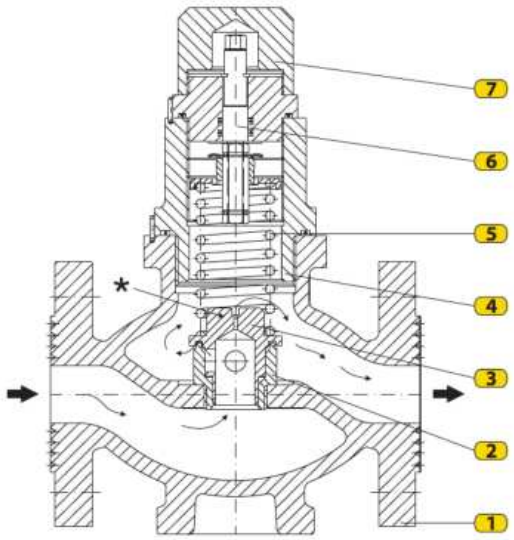

operation

In normal operation the bypass valve is closed: spring 5 presses piston 3 onto nozzle seat 2. The design always permits a small gas flow through orifice *. If consumption in the discharge line decreases, the valve opens gradually and bypasses excess fluid to another pipeline or vessel. This maintains constant discharge pressure and protects the pump and other equipment against

overpressure.

INSTALLATION DIAGRAM

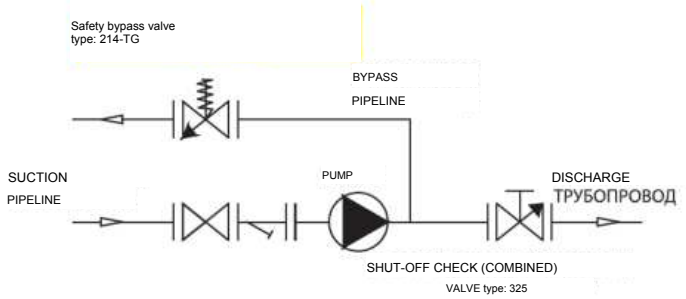

Bypass valve type 214-TG complies with EN 4126-1. The manufacturer reserves the right to modify the design for improvement.

SERIES 210

SAFETY RELIEF AND BYPASS

DIRECT-ACTING SPRING VALVES

safety blow-off valve



Type: 215

parameters

Opening pressure: popen = 5 - 20 bar

Sizes: G1/2", G3/4", G1" PN25

climatic version: U and KhL (down to -60 °C)

application

natural gas, propane-butane

air, nitrogen and industrial gases

PURPOSE

Safety relief valve type 215 protects gas installations and equipment against overpressure.

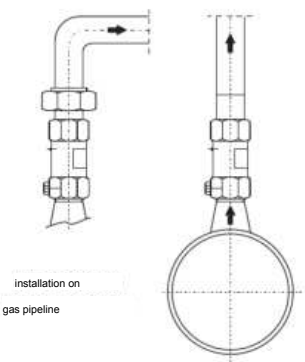

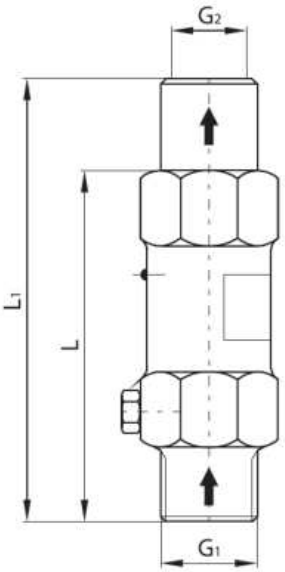

Dimensions EE

DN	G1	G2	L (mm)	L1 (mm)
15	1/2"	1/2" 3/4"	70	87
20	3/4"	3/4" 1"	82	102
25	1"	1"	110	130

materials

Pos.	description	material
1.	body	Brass LS-58-3
2.	valve disc	Brass LS-58-3
3.	Spring adjuster	Brass LS-58-3
4.	Welded branch pipe	Steel
5.	Screw	steel
6.	spring	Spring steel wire
7.	Seal	aluminum

G	$P_{откр}$ (кгс/см²)	AG
1/2"-1"	5 ÷ 20	5

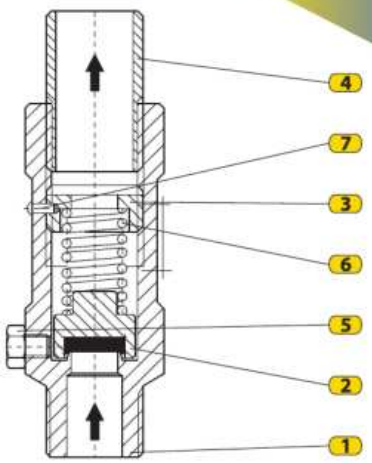

operation

The relief valve maintains the set pressure by venting gas to atmosphere when it opens. It continues venting until system pressure falls to the

design value.

In normal operation the safety relief valve is closed: disc 2 rests on the valve seat and the outlet is connected to the vent line. Spring 6 overcomes the operating-pressure force acting on the underside of disc 2 and holds the valve in the

closed position

When pressure at the safety-valve inlet rises, the opening force overcomes spring 6; the valve opens and vents gas to atmosphere until pressure falls to the design value. Spring 6 then presses disc 2 onto the seat and closes the valve. Spring 6 maintains opening pressure; adjust it to the design pressure with spring adjuster 3. After adjustment, secure adjuster 3 with seal 7.

Installation

Install the safety relief valve on the pipeline using threaded connections. Weld-on branch 4 is welded to the vent line, which discharges gas to atmosphere. Since the vent line is usually larger, a reducer must be welded in. In propane-butane installations, remove screw 5 so condensate and precipitation can drain through this opening.

FLOW TABLES =

Type: 215 G1/2"/G1/2"

$P_{откр}$ (bar)	Давление, при котором измерен расход (кгс/см²)	Расход прир. газа (нм³/ч)
5÷7,5	6	280
7÷12	10	360
10÷16	15	500
15÷20	18,4	650

Type: 215 G3/4"/G3/4"

$P_{откр}$ (bar)	Давление, при котором измерен расход (кгс/см²)	Расход прир. газа (нм³/ч)
5÷7,5	6	400
7÷12	10	650
10÷16	15	900
15÷20	18,4	1150

Type: 215 G1"/G1"

$P_{откр}$ (bar)	Давление, при котором измерен расход (кгс/см²)	Расход прир. газа (нм³/ч)
5÷7,5	6	680
7÷12	10	1000
10÷16	15	1400
15÷20	18,4	1800

Type 215 safety relief valve is easy to install and maintain. The safety valves meet EN 4126-1. The manufacturer reserves the right to modify the design for improvement.

SERIES 210

SAFETY RELIEF AND BYPASS

DIRECT-ACTING SPRING VALVES



safety blow-off valve

Type: 217

parameters

Opening pressure: Pomp=3–20 bar

Sizes: NPT1"–NPT3", G1"–G3" PN25

climatic version: U and KhL (down to -60 °C)

application

natural gas, propane-butane

AIR, NITROGEN, ETC.

purpose

Type 217 safety relief valve protects gas installations and equipment against overpressure. It is mainly used on propane-butane, ammonia and other-fluid tanks. It is installed on changeover devices or directly. On request, it is manufactured with a manual lifting mechanism (type 217-M).

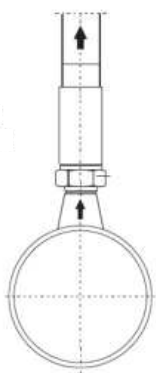

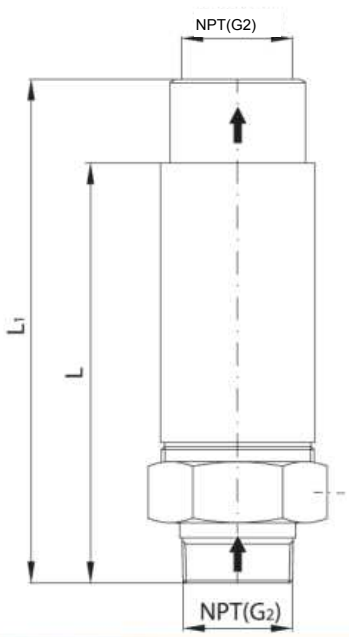

dimensions

DN	G1	G2	L	L1
			(mm)	
25	1"	1 1/4"	150	190
32	1 1/4"	1 1/2"	180	240
40	1 1/2"	2"	220	260
50	2"	2 1/2"	275	330
65	2 1/2"	3"	310	360
80	3"	4"	330	380

materials

Pos.	description	material
1.	body	Steel
2.	valve disc	Brass LS-58-3
3.	Spring adjuster	Steel St3ps;St3sp
4.	Welded branch pipe	Steel
5.	spring	Spring steel wire
6.	valve seat	Steel St3ps;St3sp
7.	Seal	Klingerit
8.	Plug seal	NBR80
9.	Axial bearing	/
10.	Screw	steel
11.	Guide sleeve	Steel 08X18H10

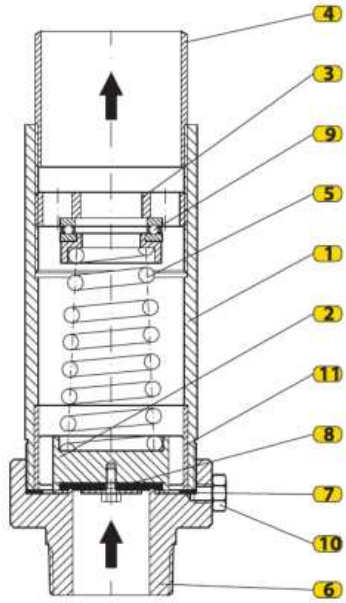

operation

The relief valve maintains the set pressure by venting gas to atmosphere when it opens, until installation pressure falls to the design value. Normally the valve is closed: plug 2, with seal 8, is pressed against seat 6. Spring 5 overcomes working pressure acting under plug 2 and keeps the valve closed. When inlet pressure reaches the opening setting, it overcomes spring 5; the valve opens and vents gas until pressure returns to the design value. Spring 5 then drives plug 2 onto the seat and the valve

closes.

Spring 5 maintains the valve opening pressure. Set it to the design pressure with spring adjuster 3. Seal the valve after adjustment.

INSTALLATION 1

Install the safety relief valve on the pipeline using threaded connections. Weld-on branch 4 is welded to the vent line, which discharges gas to atmosphere. In propane-butane installations, remove screw 10 so condensate and precipitation can drain through this opening.

DN40 PN25

Настроенное давление (кгс/см²)	Пропускная способност/воздух (м³/мин) (110% от настроенного давления)	Настроенное давление (кгс/см²)	Пропускная способност/воздух (м³/мин) (120% от настроенного давления)
5,6	44	7,0	60
7,0	55	8,8	75
10,5	75	11,0	90
14,0	97	14,0	112
16,7	120	16,7	137
17,6	130	17,6	146
19,4	142	22,0	180

Inlet connection:
DN40 PN25 (NPT1 1/2")

Outlet connection: M56x2

Seat diameter: 30 mm

DN50 PN25

Настроенное давление (кгс/см²)	Пропускная способност/воздух (м³/мин) (110% от настроенного давления)	Настроенное давление (кгс/см²)	Пропускная способност/воздух (м³/мин) (120% от настроенного давления)
5,6	70	7,0	95
7,0	87	8,8	120
10,5	121	11,0	144
14,0	154	14,0	176
16,7	194	16,7	220
17,6	207	17,6	231
19,4	229	22,0	284

Inlet connection:
DN50 PN25 (NPT2")

Outlet connection:
DN65 PN25 (NPT2 1/2")

Seat diameter: 38 mm

DN65 PN25

Настроенное давление (кгс/см²)	Пропускная способност/воздух (м³/мин) (110% от настроенного давления)	Настроенное давление (кгс/см²)	Пропускная способност/воздух (м³/мин) (120% от настроенного давления)
5,6	101	7,0	135
7,0	124	8,8	171
10,5	172	11,0	206
14,0	220	14,0	251
16,7	278	16,7	304
17,6	295	17,6	330
19,4	327	22,0	406

Inlet connection:
DN65 PN25 (NPT2 1/2")

Outlet connection:
DN80 PN25 (NPT3")

Seat diameter: 45 mm

DN80 PN25

Настроенное давление (кгс/см²)	Пропускная способност/воздух (м³/мин) (110% от настроенного давления)	Настроенное давление (кгс/см²)	Пропускная способност/воздух (м³/мин) (120% от настроенного давления)
5,6	210	7,0	282
7,0	255	8,8	357
10,5	355	11,0	430
14,0	454	14,0	525
16,7	556	16,7	655
17,6	610	17,6	690
19,4	675	22,0	850

Inlet connection:
DN80 PN25 (NPT3")

Outlet connection:
M114x3 (NPT4")

Seat diameter: 65 mm

Pos.	DESCRIPTION
1.	Exhaust pipe
2.	Valve type 217
3.	Distribution heads

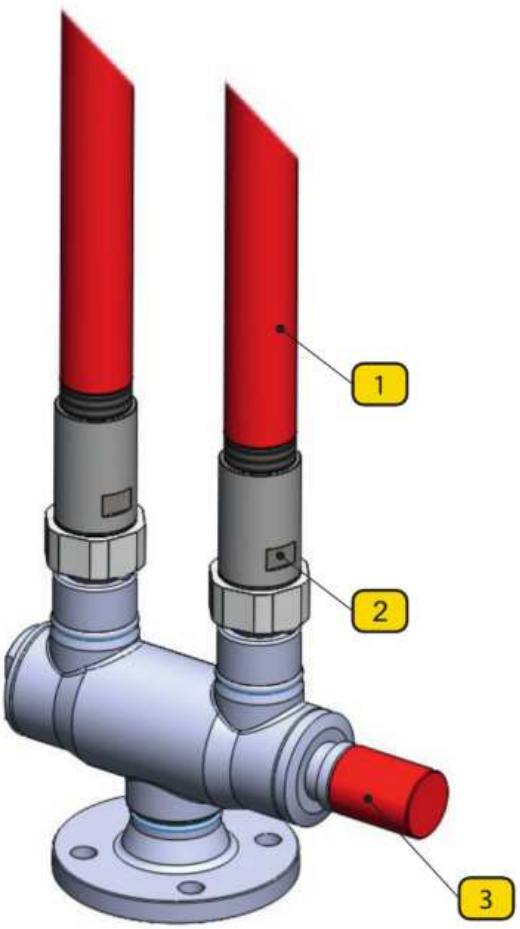

Type 217 safety relief valve is easy to install and maintain. The safety valves meet EN 4126-1. The manufacturer reserves the right to modify the design for improvement.

SERIES
210

SAFETY RELIEF AND BYPASS

DIRECT-ACTING SPRING VALVES

safety blow-off valve



Type: 218-UN

parameters

Opening pressure: popen = 2 - 20 bar

Sizes: G1/2", G3/4", G1" PN25

climatic version: U and KhL (down to -60 °C)

application

natural gas, propane-butane

air, nitrogen and industrial gases

purpose

Type 218-UN safety relief valve protects gas installations and equipment against overpressure.

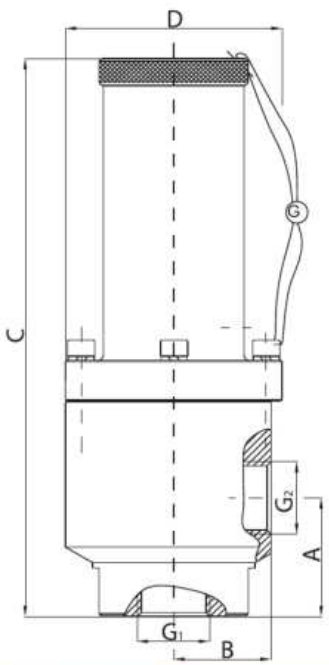

Dimensions EE

DN	G1	G2	A	B	C	D
			(mm)			
15	1/2"	3/4"	37	24,5	112	54
20	3/4"	1"	44	36	207	80
25	1"	5/4"	48	36	207	80
32	5/4"	6/4"	58	36	227	80

diagram

Pos.	description
1.	body
2.	seat
3.	valve disc
4.	spring housing
5.	spring
6.	Spring adjuster
7.	cover

G	$P_{откр}$ (кгс/см²)	AG
1/2"-1¼"	2 ÷ 20	10

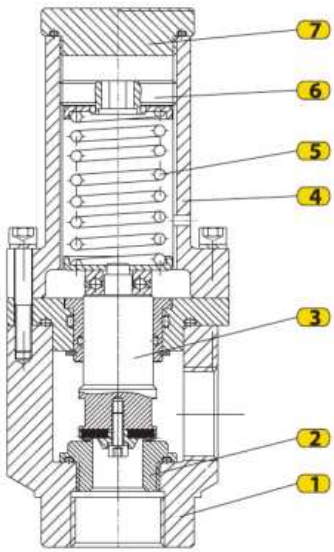

Version 1

Popen ≤ 10 bar

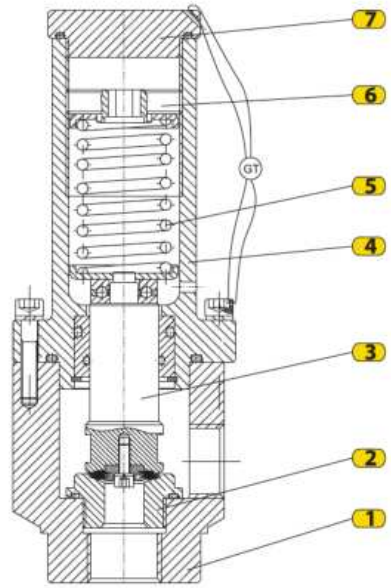

Version 2

Po>10 bar

operation

The relief valve maintains the specified pressure by venting gas to atmosphere

when the valve opens.

The valve vents gas until installation pressure reaches the design value. Normally it is closed, with plug 3 on seat 2. Spring 5 overcomes working pressure beneath plug 3 and keeps it closed. At the opening setting, inlet pressure overcomes spring 5; the valve opens and vents gas to the design value. Spring 5 then closes plug 3 on seat 2. Spring 5 maintains opening pressure; set it with adjuster 6.

Type 218-UN safety relief valve is easy to install and maintain. The safety valves meet EN 4126-1.

The manufacturer reserves the right to modify the design to improve it.

SERIES
210

SAFETY RELIEF AND BYPASS

DIRECT-ACTING SPRING VALVES



safety blow-off valve
(ANGLE, FLANGED)

parameters
Opening pressure: popen = 2 - 20 bar
Sizes: DN15–DN50 PN25/40, ANSI150
Climate version: U and KhL (to -60 °C)

application
natural gas, propane-butane
air, nitrogen and industrial gases

Type: 218-UP

purpose

Type 218-UP safety relief valve protects gas installations and equipment against overpressure.

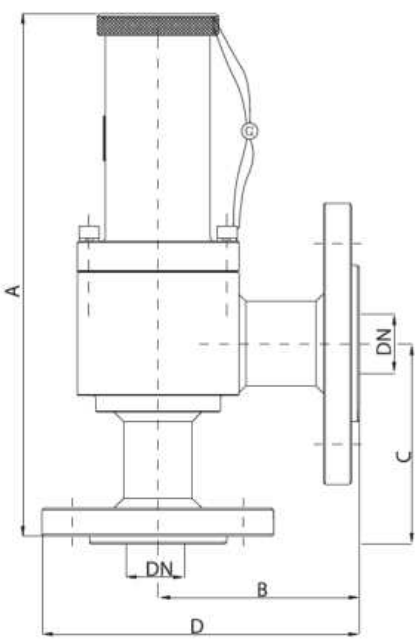

Dimensions

$DN_{вх}$	$DN_{вых}$	G_2	A	B	C	D
			(mm)			
25	32	3/4"	37	24,5	112	54
25	40	1"	44	36	207	80
40	50	5/4"	48	36	207	80
50	65	6/4"	58	36	227	80

diagram

Pos.	description
1.	body
2.	seat
3.	valve disc
4.	spring housing
5.	spring
6.	Spring adjuster
7.	cover

G	$P_{откр}$ (кгс/см²)	AG
25÷50	2 ÷ 20	10

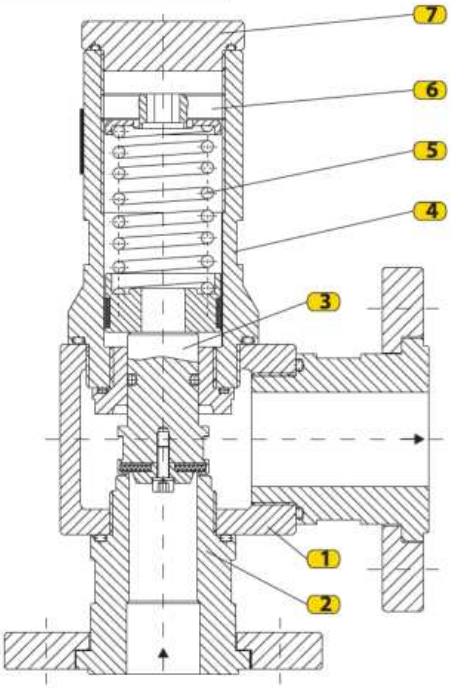

Option!
Po<10 bar

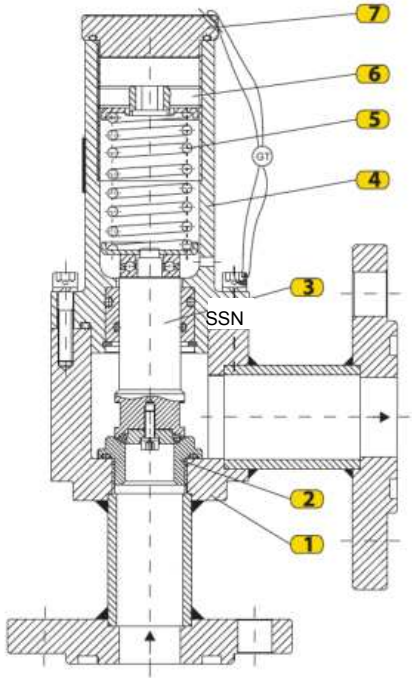

Option II
Popen > 10 bar

operation

The relief valve maintains the specified pressure by venting gas to atmosphere

when the valve opens.

The valve vents gas until installation pressure reaches the design value. Normally it is closed, with plug 3 on seat 2. Spring 5 overcomes working pressure beneath plug 3 and keeps it closed. At the opening setting, inlet pressure overcomes spring 5; the valve opens and vents gas to the design value. Spring 5 then closes plug 3 on seat 2. Spring 5 maintains opening pressure; set it with adjuster 6.

Type 218-UP safety relief valve is easy to install and maintain. The safety valves meet EN 4126-1.

The manufacturer reserves the right to modify the design to improve it.

SERIES
210

SAFETY RELIEF AND BYPASS

DIRECT-ACTING SPRING VALVES



safety blow-off valve
(ANGLE AND STRAIGHT-FLOW)

parameters

Opening pressure: Popen=10–50 bar

Sizes: G1/2"–G1" (NPT)

climatic version: U and KhL (down to -60 °C)

application

natural gas, propane-butane

air, nitrogen and industrial gases

Type: 219-VP

purpose

Type 219-VP safety relief valve protects gas installations and equipment against overpressure.

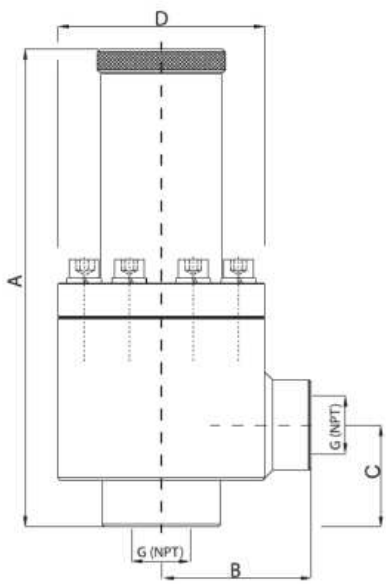

Dimensions

$G_{вх}$	$G_{вых}$	A	B	C	D
		(mm)			
3/4"	3/4"	263	100	100	158
3/4"MPT|3/4"NPT|263			140	100	198
3/4" MPT	1" MPT	348	115	115	180

diagram

Pos.	description
1.	body
2.	seat
3.	valve disc
4.	spring housing
5.	spring
6.	Spring adjuster
7.	cover

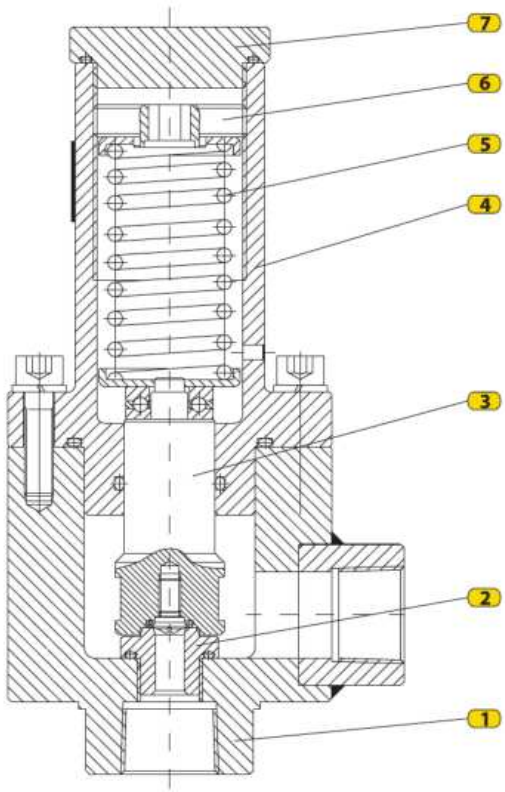

operation

Above permissible pressure, the safety valve opens seat (2) and vents gas until pressure falls to the set value. Normally plug (3), with rubber seal, is pressed on seat (2). Spring (5) balances gas pressure beneath the plug and keeps it closed. At the opening setting, inlet pressure compresses spring (5), opens the seat and vents gas. When pressure falls, the spring closes the valve. Set opening pressure by turning adjuster (6), changing spring (5) preload. After adjustment, the spring adjuster

is closed with a sealing cap.

Type 219-VP safety relief valve is easy to install and maintain. The safety valves meet EN 4126-1.

The manufacturer reserves the right to modify the design to improve it.

SERIES 210

SAFETY RELIEF AND BYPASS

DIRECT-ACTING SPRING VALVES

safety blow-off valve

(flanged)



Type: 219-B-VP

parameters

Opening pressure: Pon=10–100 bar

Sizes: DN25–DN100 ANSI300/600/900

climatic version: U and KhL (down to -60 °C)

application

natural gas, propane-butane

air, nitrogen and industrial gases

PURPOSE

Type 219-B-VP safety relief valve protects installations and equipment against pressure above the set limit. It trips when outlet pressure exceeds the adjusted threshold. Its balanced design permits more accurate adjustment and faster opening and closing. Type 219 is easy to install and maintain.

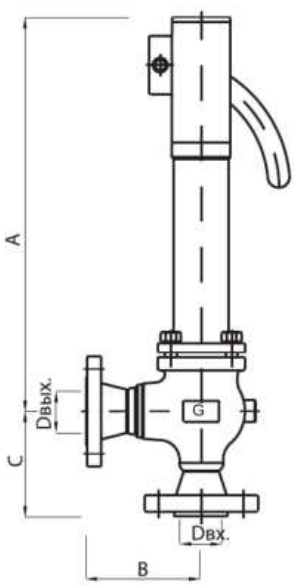

DIMENSIONS

(ANSI300/600)

$DN_{вх.}$	$DN_{вых.}$	A	B	C
		(mm)		
25	40	545	155	140
40	50/65	545	160	145
50	65/80	545	175	150
65	80/100	580	185	180
80	100/150	580	185	185
100	150/200	625	190	230

materials

item	description	material	
1.	body	steel	GP240GH
2.	seat	steel	X15Cr13
3.	valve disc	steel	X15Cr13
4.	Cylinder	steel	X15Cr13
5.	spring	steel	X15Cr13
6.	spring	steel	X15Cr13
7.	Adjusting screw	steel	42CrMo4
8.	lever	steel	S235JR
9.	Upper body	steel	C22
10.	cover	steel	S235JR
11.	Nut	steel	S355J2G3

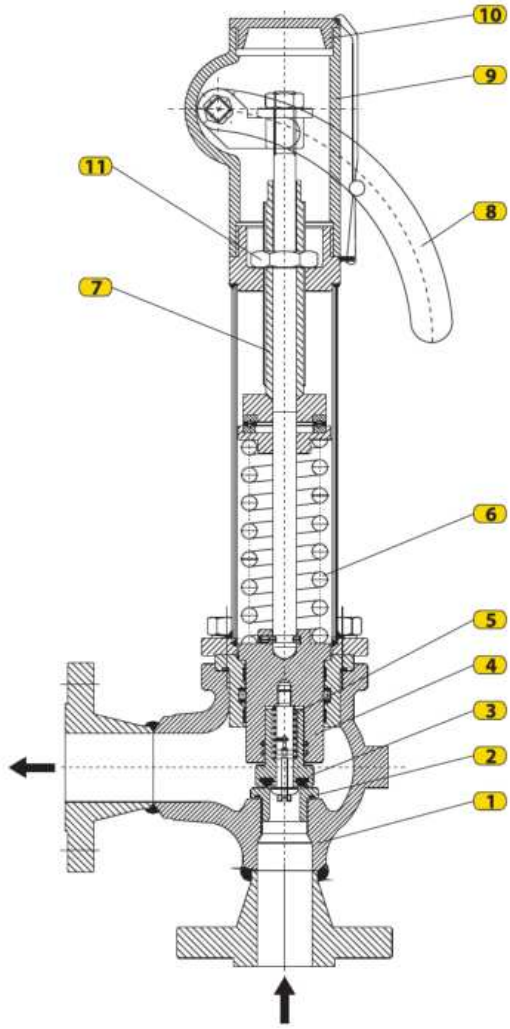

operation

The main function of type 219-B-VP relief valve is to maintain the set pressure by venting gas to atmosphere when it opens. It vents until installation pressure falls to the

set value.

Normally the valve is closed, plug (3) on seat (2). Spring (5) overcomes pressure beneath plug (3). When inlet pressure reaches the setting and overcomes spring (6), the valve opens and vents gas to the set value. Spring (6) then closes plug (3) on seat (2). Adjust opening pressure with screw (7), changing spring (6) force. Lock screw (7) with nut (11) and seal the valve. Type 219 also permits manual relief: press lever (8) against spring (6) to open it.

Type 219-B-VP safety relief valve is easy to install and maintain. The safety valves meet EN 4126-1.

The manufacturer reserves the right to modify the design to improve it.

SERIES 220

PILOT-OPERATED SAFETY VALVES

RELIEF AND BYPASS

SAFETY RELIEF AND BYPASS VALVE



Type: 222

parameters

Opening pressure: Popen=0.03–20 bar

Sizes: DN25–DN100 PN16/25, ANSI150

climatic version: U and KhL (down to -60 °C)

application

natural gas, propane-butane

air, nitrogen and industrial gases

purpose

Type 222 safety relief and bypass valve protects gas installations against overpressure. At gas stations and on gas lines it is installed downstream of the pressure regulator, in the direction of gas flow. Pilot operation, in addition to the valve's high capacity,

allows a wide and accurate range of pressure settings

opening.

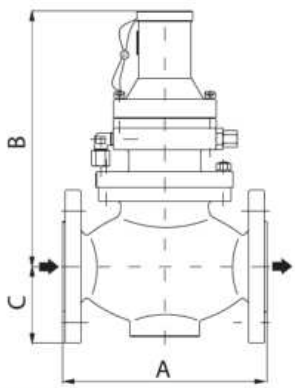

Установка

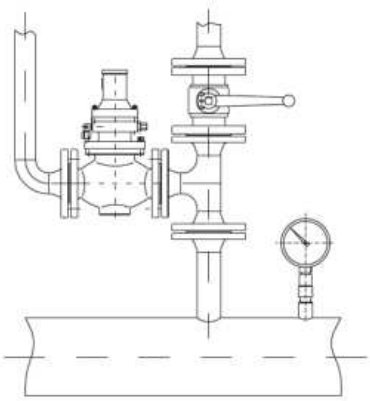

Dimensions

DN / размер	25	32	40	50	65	80	100
A	160	180	200	230	290	310	350
B|(mm)|	240	240	255	260	285	295	320
C	60	70	75	85	100	120	135

Pos.	Description
1.	body
2.	valve seat
3.	diaphragm
4.	Valve spring
5.	Pilot seat
6.	Seat spring
7.	stem
8.	Pilot spring
9.	Spring adjuster
10.	cover

$P_{откр}$ (кгс/см²)	AG
0,05 ÷ 0,5	5
0,5 ÷ 12	2,5
12 ÷ 20	1,5

SRV type: 222

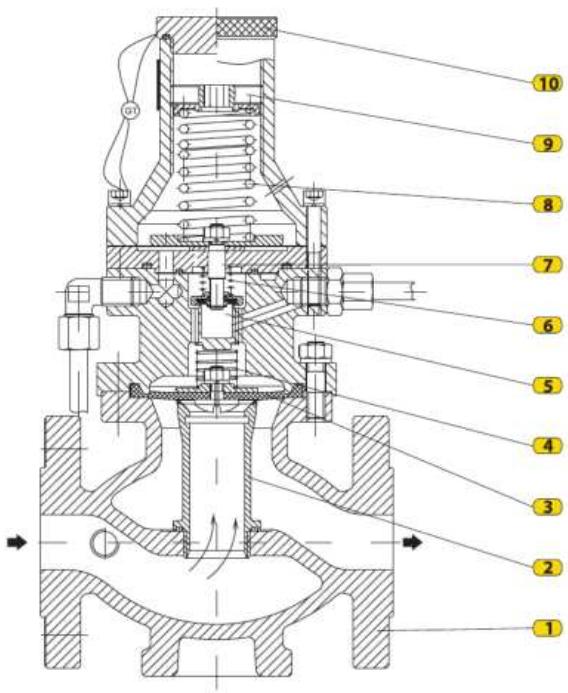

operation

When installation pressure rises, the relief valve opens seat (2) and releases

a controlled amount of gas to atmosphere.

Gas is discharged until installation pressure falls to the design value.

Normally, the safety relief valve is closed: spring (4) presses diaphragm (3) onto seat (2). As gas pressure rises, pilot seat (5) opens and pressure above diaphragm (3) falls; pressure below the diaphragm compresses spring (4) and opens the valve. Gas vents to atmosphere until pressure drops to the set value. The pilot then closes; pressure above diaphragm (3), together with spring (4), closes the valve. Opening pressure is set by pilot spring adjuster (9), thereby

changing the tension of pilot spring (8). After adjustment, fit the

pilot cover (10).

Safety valves type 222 comply with EN 4126-1. The manufacturer reserves the right to modify the design for improvement.

SERIES
220

PILOT-OPERATED SAFETY VALVES

RELIEF AND BYPASS

SAFETY RELIEF AND BYPASS VALVE



Type: 226

parameters

Opening pressure: popen = 10–160 bar

Sizes: DN25–DN150 PN100/160, ANSI 600/900

climatic version: U and KhL (down to -60 °C)

application

natural gas, propane-butane

air, nitrogen and industrial gases

purpose

Safety relief and bypass valve type 226 protects gas installations and equipment against excessive pressure. Pilot control combines the valve's high flow capacity with a wide, precise opening-pressure adjustment range. It may be installed vertically or horizontally.



Dimensions

SIZE / DN			25	40	50	65	80	100	150
A	(mm)	ANSI300	197	235	267	292	317	368	473
		ANSI600	210	251	286	311	337	394	508
		ANSI300/600 *	160	200	230	290	310	350	450

diagram

item	description	item	description
1.	Valve body	8.	Inlet seat
2.	valve seat	9.	Inlet-seat plug
3.	valve disc	10.	Outlet-seat stem
4.	Cylinder	11.	Outlet seat
5.	Valve spring	12.	Adjusting screw
6.	Pilot piston	13.	cover
7.	Pilot spring	14.	Safety-valve pilot

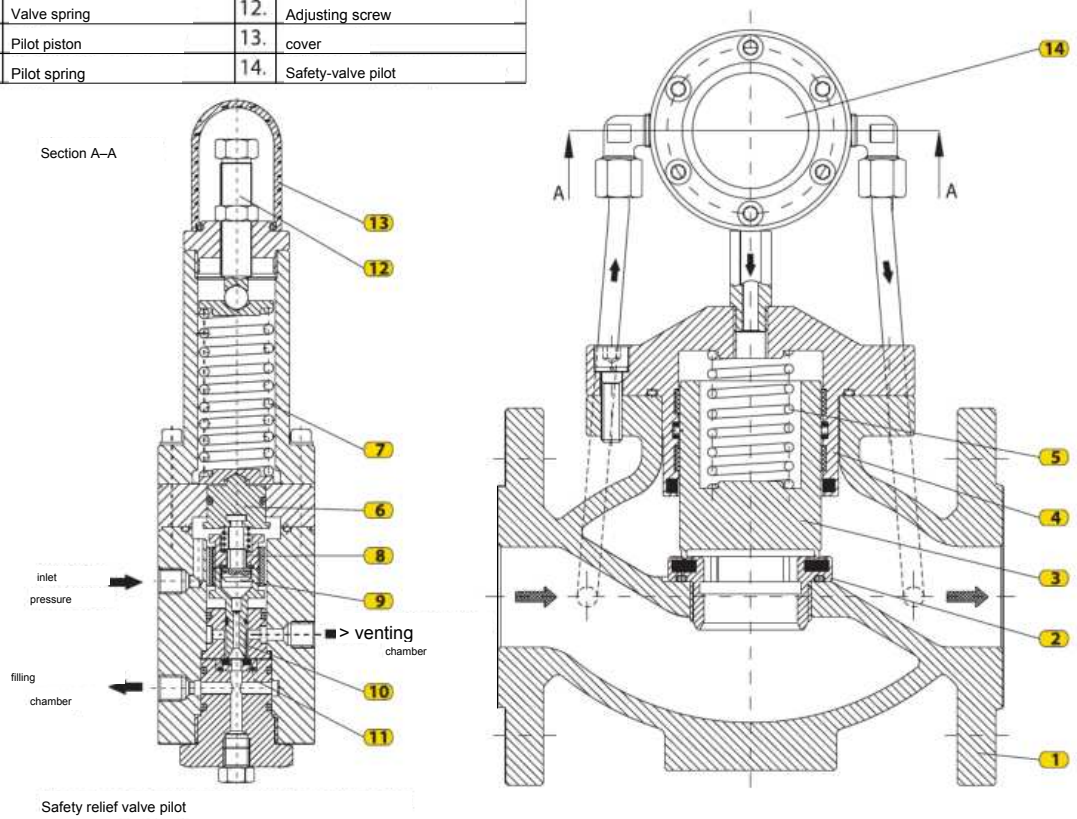

Safety relief valve pilot

operation

Safety valve vents excess pressure until pressure is restored. Normally, spring (5) and inlet pressure on plug (3) press it onto seat (2). As pressure rises, piston (6) overcomes spring (7) and closes inlet seat (8); plug (9) pulls outlet-seat stem (10), venting the chamber. Pressure above plug (3) falls, so pressure below it overcomes spring (5) and opens the valve. When pressure falls, pilot closes, pressures across plug (3) equalize and spring (5) reseats it. Set opening pressure with pilot screw (12).

Safety valves type 226 comply with EN 4126-1. The manufacturer reserves the right to modify the design for improvement.

SERIES
230

SAFETY SHUT-OFF VALVES

valves

SAFETY SHUT-OFF VALVE

LOW PRESSURE



Type: 231-BV

parameters

Closing pressure: pon = max. 0.03–5 bar

pon = min. 0.002–0.6 bar

Sizes: DN25÷DN65 PN16/25, ANSI150

Climate version: U and KhL (down to −60 °C)

application

NATURAL GAS, PROPANE-BUTANE,

air, nitrogen and industrial gases

PURPOSE

Safety shut-off valve (SSV) type 231-BV protects gas equipment and automatically shuts off gas flow when system pressure reaches the upper or lower trip limit. Reset the SSV only manually after eliminating the cause of the trip. Install the SSV upstream of the pressure regulator.

INSTALLATION AND MOUNTING

Before installation, ensure the line upstream of the SSV is free of mechanical contaminants and install a filter upstream. The SSV supports left-to-right or right-to-left gas flow. Connect its impulse line to the controlled-pressure line downstream of the regulator. Recommended mounting: on a horizontal line with the SSV mechanism vertically up or down. Any operating position is allowed if maintenance access is ensured.

Gas enters below the SSV diaphragm through the impulse line. If outlet pressure exceeds the permitted limit, the SSV diaphragm mechanism moves upward against spring 10, whose trip pressure is set by adjuster 9. This moves lever 15 and latch tooth 12; tooth 12 releases sleeve 13, and spring 14 drives stem 2 so disc 4 seats on seat holder 3 and shuts off gas flow.

If outlet pressure falls below the permitted limit, spring 7, whose trip pressure is set by adjuster 8, moves the SSV diaphragm mechanism downward. Lever 15 and latch tooth 12 move; tooth 12 releases sleeve 13, and spring 14 drives stem 2 so disc 4 seats on seat holder 3 and

shuts off the gas flow.

SSV reset:

The SSV may be reset only manually, after determining and eliminating the cause of

tripping, as follows:

Unscrew reset handle 11 from SSV body 1, reverse it and screw it onto stem 2. Pull slowly and hold until pressure equalizes, then pull fully; stem 2 must latch. Reset the SSV and return handle 11 to body 1. If diaphragm 6 ruptures, gas vents to atmosphere; permitted leakage is up to 30 l/h per SRPS EN ISO 4126-1. Indoors, replace the breather with a vent line led outside. An optional SSV trip sensor acts as an ON/OFF switch and sends an alarm to the control panel.

SSV reset

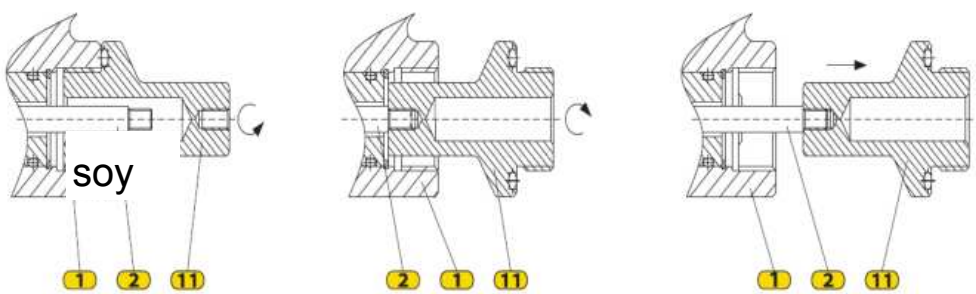

Pos.	Description	Material	Pos.	Description	Material	Pos.	Description	Material
1.	Lower SSV body	Al alloy AK9ch	6.	diaphragm	Effbe	12.	Latch tooth	Steel 20Kh13
2.	stem	Steel 08Kh18N10	7.	LP spring	Spring steel wire	13.	Sleeve	Steel 08Kh18N10
3.	seat	Steel 08Kh18N10	8.	LP adjusting nut	Steel St3ps; St3sp	14.	Stem spring	Spring steel wire
4.	Plug	Brass LS-58-3	9.	HP adjusting nut	Steel St3ps; St3sp	15.	lever	Steel 08; 08kp
5.	regulator body	Steel 20L	10.	HP spring	Spring steel wire	16.	Upper SSV body	Al alloy AK9ch
			11.	Reset handle	Brass LS-58-3	17.	Stem extension	Brass LS-58-3

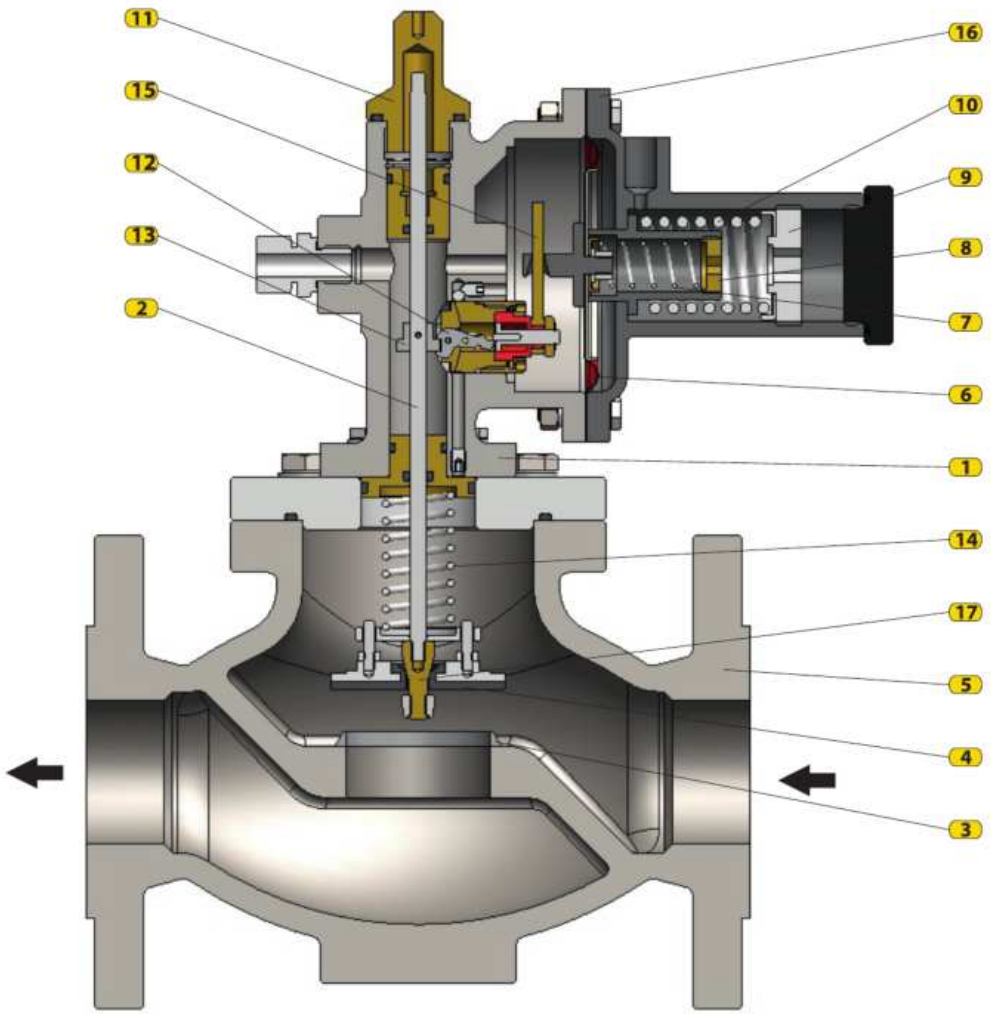

Periodic inspection and maintenance

For stable SSV operation, regularly inspect the SSV and upstream equipment as follows:

– check gas-filter fouling; promptly blow, clean or replace the filter element;

– check the SSV plug seal in the closed position;

– check the trip-pressure setting once a year.

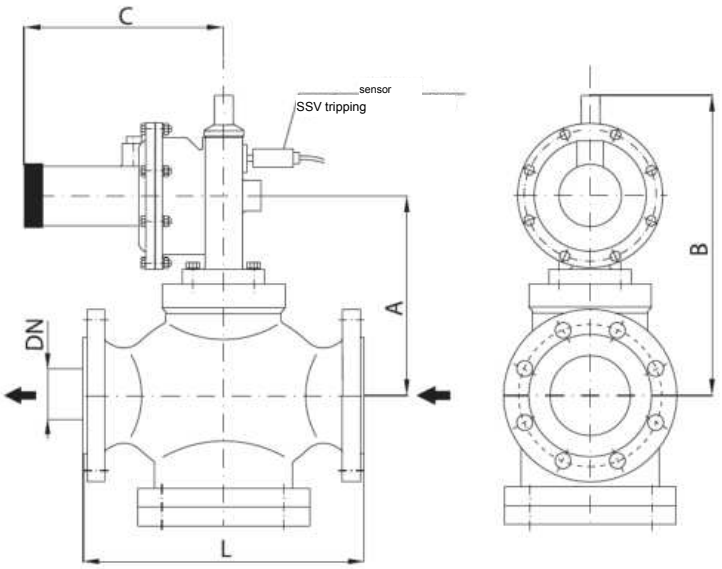

dimensions

SIZE \ DN		25	32	40	50	65
L	(mm)	160	180	200	230	290
A		135	135	145	150	200
B		225	225	260	265	290
C		165	165	165	165	165

Characteristics

DN		p_{6n} (bar)	AG
25÷65	VP	0,03÷2,0	2,5
		2,0÷5,0	
	NP	0,002÷0,6	5

When selecting the SSV size, maintain a flow velocity of 50–60 m/s. SSV type 231-BV complies with EN 14382.

The manufacturer reserves the right to modify the design to improve it.

SERIES
230

SAFETY SHUT-OFF VALVES

valves

SAFETY SHUT-OFF VALVE

LOW AND MEDIUM PRESSURE



parameters

Closing pressure: pon = max. 1–16 bar

pon = min. 0.05–4 bar

Sizes: DN80–DN200 PN16/25, ANSI 150

Climate version: U and KhL (down to −60 °C)

application

NATURAL GAS, PROPANE-BUTANE,

air, nitrogen and industrial gases

Type: 232-BV

PURPOSE

Safety shut-off valve (SSV) type 232-BV protects gas equipment and automatically shuts off gas flow when system pressure reaches the upper or lower trip limit. Reset the SSV only manually after eliminating the cause of the trip. Install the SSV upstream of the pressure regulator.

INSTALLATION AND MOUNTING

Before installation, ensure the line upstream of the SSV is free of mechanical contaminants and install a filter upstream. The SSV supports left-to-right or right-to-left gas flow. Connect its impulse line to the controlled-pressure line downstream of the regulator. Recommended mounting: on a horizontal line with the SSV mechanism vertically up or down. Any operating position is allowed if maintenance access is ensured.

operation

SSV type 232-BV consists of three main parts:

- корпуса valve body;

– locking mechanism;

– SSV pilot.

The SSV is available in two versions:

– high- and low-pressure protection – VNP;

– high-pressure protection – VP

Controlled pressure (p) is conveyed through the impulse line to SSV pilot 2 below diaphragm 7. Pilot 2 is a control device with an adjustable spring for setting the SSV

trip limits. HP spring 8 is set by adjuster 9 and LP spring 10 by adjuster 11. As p rises to p2-H-VP, pilot pressure compresses spring 8; lock 13 releases ball 21 and pilot stem 12. Spring 22 drives stem 12, needle tip 14 and impact pin 15; rotary key 16 turns, balls 17 release stem 5, and spring 4 presses plug 3 onto seat 2, stopping gas. As p falls to p2-L-NP, LP spring 10 moves lock 13 and the same chain trips the SSV. It can also be tripped manually with simulator button 18.

Reset the SSV only manually after eliminating the trip cause

as follows:

1. HIGH-PRESSURE PROTECTION

– close the inlet shut-off device of the regulating line; keep the outlet device open;

– press axially to engage handwheel 20 with the pinion shaft and turn it counter-

clockwise; plug 3 leaves seat 2 and pressure upstream/downstream of the SSV equalizes.

– remove cover 23 and press lock button 24. If outlet pressure is less than or equal to

the upper SSV trip limit, the pilot resets, i.e. the lock button

locks;

– turn handwheel 20 until it locks;

– slowly open the inlet shut-off device of the regulating line.

2. HIGH- AND LOW-PRESSURE PROTECTION

– close the inlet shut-off device of the regulating line; keep the outlet device open;

– press axially to engage handwheel 20 with the pinion shaft and turn it counter-

clockwise; plug 3 leaves seat 2 and pressure upstream/downstream of the SSV equalizes.

– remove cover 23 and press lock button 24. If outlet pressure is between the upper and

lower SSV trip limits, the pilot resets, i.e. the lock button

locks;

– turn handwheel 20 until it locks;

– slowly open the inlet shut-off device of the regulating line.

Pos.	Name	Pos.	Name	Pos.	Name
1.	body	9.	HP spring adjuster	17.	Locking-mechanism ball
2.	seat	10.	MR spring	18.	Manual shut-off button
3.	valve disc	11.	MR spring adjuster	19.	SSV trip sensor
4.	spring	12.	Pilot stem	20.	Handwheel
5.	stem	13.	Pilot lock	21.	Pilot ball
6.	Locking-mechanism body	14.	Needle tip	22.	spring
7.	Pilot diaphragm	15.	Needle	23.	cover
8.	VP spring	16.	Rotary key	24.	Lock button

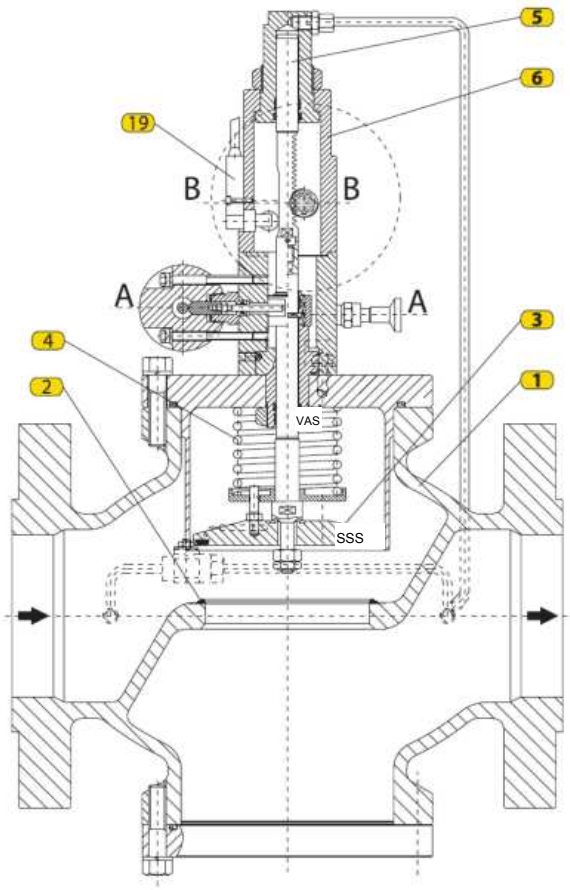

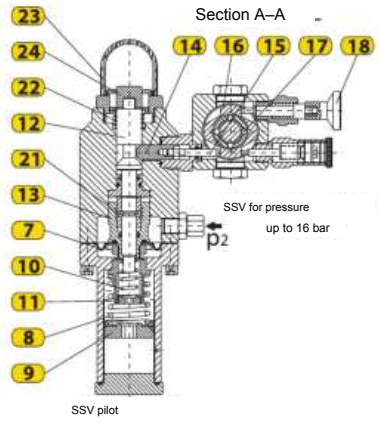

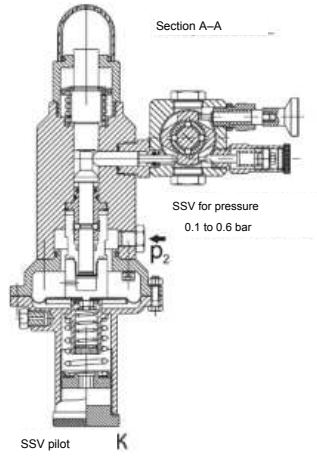

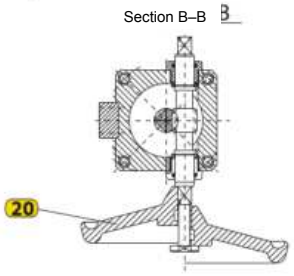

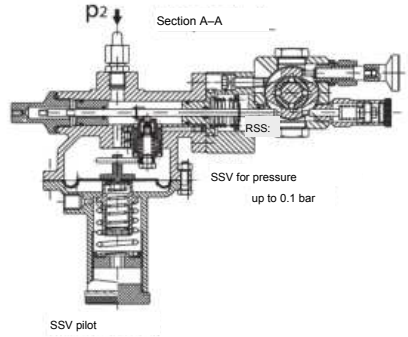

Periodic inspection and maintenance

For stable SSV operation, regularly inspect the SSV and upstream equipment as follows:

– check gas-filter fouling; promptly blow, clean or replace the filter element;

– check the SSV plug seal in the closed position;

– check the trip-pressure setting once a year.

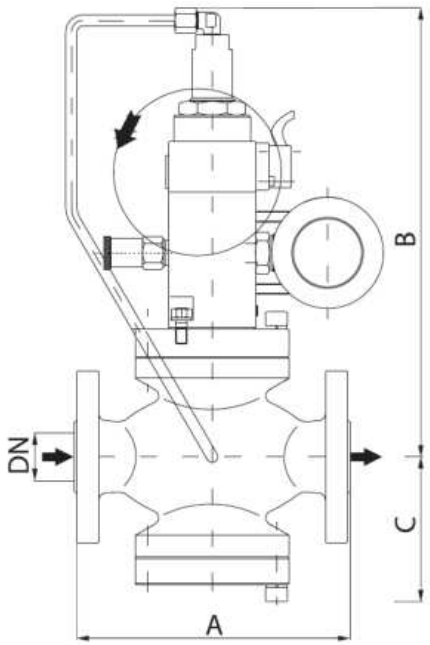

dimensions

размер \ DN	80	100	150	200
A	298	352	451	543
B (mm)	360	360	585	600
C	165	165	220	250

Characteristics

DN		p_{bl} (bar)	AG
80÷200	VP	0,04÷1,0	10
		1,0÷2,0	5
		2,0÷8,0	2,5
	NP	0,08÷0,02	10
		0,02÷0,5	5
		0,5÷10	2,5

When selecting the SSV size, maintain a flow velocity of 50–60 m/s. SSV type 232-BV complies with EN 14382.

The manufacturer reserves the right to modify the design to improve it.

SERIES
230

SAFETY SHUT-OFF VALVES

valves

SAFETY SHUT-OFF VALVE

HIGH PRESSURE



Type: 234-BV

parameters

Closing pressure: pon = max. 2–75 bar

pon = min. 0.1–4 bar

Sizes: DN25÷DN200 ANSI300/600

Climate version: U and KhL (down to −60 °C)

application

NATURAL GAS, PROPANE-BUTANE,

air, nitrogen and industrial gases

PURPOSE

Safety shut-off valve (SSV) type 234-BV protects gas equipment and automatically shuts off gas flow when system pressure reaches the upper or lower trip limit. Reset the SSV only manually after eliminating the cause of the trip. Install the SSV upstream of the pressure regulator.

INSTALLATION AND MOUNTING

Before installation, ensure the line upstream of the SSV is free of mechanical contaminants and install a filter upstream. The SSV supports left-to-right or right-to-left gas flow. Connect its impulse line to the controlled-pressure line downstream of the regulator. Recommended mounting: on a horizontal line with the SSV mechanism vertically up or down. Any operating position is allowed if maintenance access is ensured.

operation

SSV type 234-BV consists of three main parts:

- корпуса valve body;

– locking mechanism;

– SSV pilot.

The SSV is available in two versions:

– high- and low-pressure protection – VNP;

– high-pressure protection – VP

Controlled pressure (p2) is fed through the impulse line to the SSV pilot beneath diaphragm 7. Pilot 2 is the sensing device; its adjustable spring sets the trip limits.

HP spring 8 is set by adjuster 9; LP spring 10 by adjuster 11. At the upper p2 limit, diaphragm pressure compresses spring 8 and moves pilot latch 13, releasing ball 21 and stem 12. Spring 22 drives stem 12, tip 14 and striker 15. The striker turns key 16; balls 17 release stem 5. Spring 4 seats closure member 3 on seat 2, stopping gas. At the lower p2 limit, spring 10 moves latch 13 and trips the SSV identically. Press simulator button 18 for manual trip.

Reset the SSV only manually after eliminating the trip cause

as follows:

1. HIGH-PRESSURE PROTECTION

– close the inlet shut-off device of the regulating line; keep the outlet device open;

– press axially to engage handwheel 20 with the pinion shaft and turn it counter-

clockwise; plug 3 leaves seat 2 and pressure upstream/downstream of the SSV equalizes.

– remove cover 23 and press lock button 24. If outlet pressure is less than or equal to

the upper SSV trip limit, the pilot resets, i.e. the lock button

locks;

– turn handwheel 20 until it locks;

– slowly open the inlet shut-off device of the regulating line.

2. HIGH- AND LOW-PRESSURE PROTECTION

– close the inlet shut-off device of the regulating line; keep the outlet device open;

– press axially to engage handwheel 20 with the pinion shaft and turn it counter-

clockwise; plug 3 leaves seat 2 and pressure upstream/downstream of the SSV equalizes.

– remove cover 23 and press lock button 24. If outlet pressure is between the upper and

lower SSV trip limits, the pilot resets, i.e. the lock button

locks;

– turn handwheel 20 until it locks;

– slowly open the inlet shut-off device of the regulating line.

Pos.	Name	Pos.	Name	Pos.	Name
1.	body	9.	HP spring adjuster	17.	Locking-mechanism ball
2.	seat	10.	MR spring	18.	Manual shut-off button
3.	valve disc	11.	MR spring adjuster	19.	SSV trip sensor
4.	spring	12.	Pilot stem	20.	Handwheel
5.	stem	13.	Pilot lock	21.	Pilot ball
6.	Locking-mechanism body	14.	Needle tip	22.	spring
7.	Pilot diaphragm	15.	Needle	23.	cover
8.	VP spring	16.	Rotary key	24.	Lock button

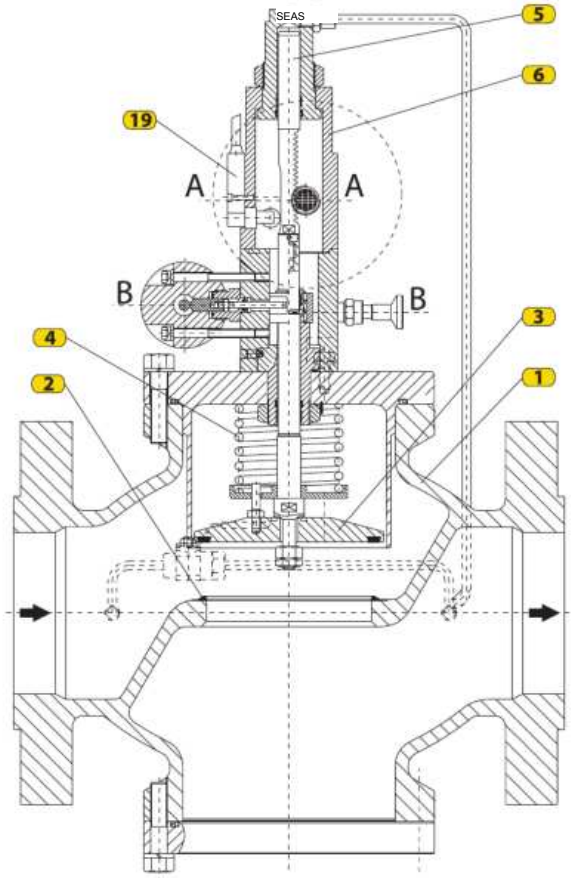

Section B–B

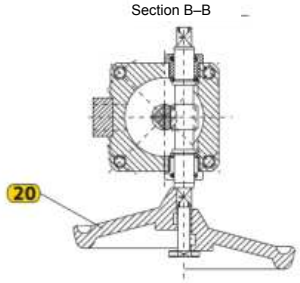

Section A–A

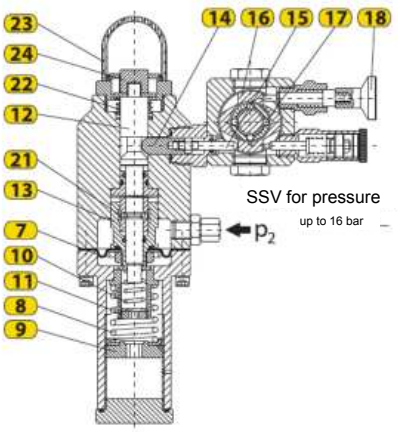

SSV pilot

Section A–A

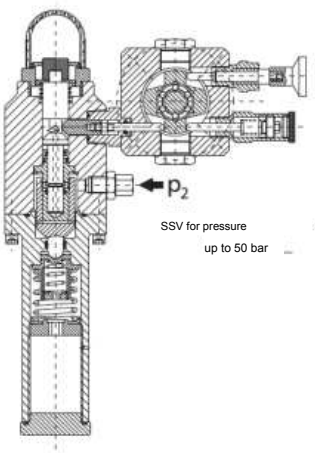

SSV pilot

Periodic inspection and maintenance

For stable SSV operation, regularly inspect the SSV and upstream equipment as follows:

– check gas-filter fouling; promptly blow, clean or replace the filter element;

– check the SSV plug seal in the closed position;

– check the trip-pressure setting once a year.

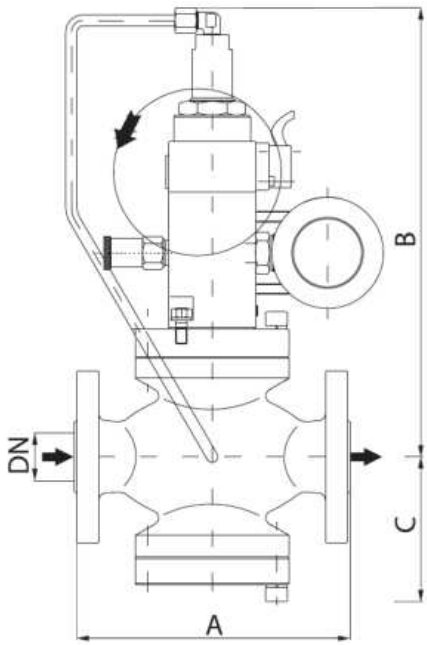

dimensions

SIZE \ DN			25	40	50	65	80	100	150	200
A	(mm)	ANSI300	197	235	267	292	317	368	473	568
		ANSI300	210	251	286	311	337	394	508	610
		ANSI300/600*	160	200	230	290	310	350	450	600
B			315	305	355	340	360	555	585	600
C			100	115	120	150	165	185	220	250

Characteristics

DN		p_{bl} (bar)	AG
25÷200	VP	3,0÷19,0	2,5
	NP	0,5÷4,0	5

When selecting the SSV size, a flow velocity of 50-60 m/s is recommended. SSV type 234-BV complies with EN 14382.

The manufacturer reserves the right to modify the design to improve it.

SERIES
230

SAFETY SHUT-OFF VALVES

valves



SAFETY SHUT-OFF VALVE

HIGH PRESSURE

parameters

Closing pressure: pon = max. 0.03–5 bar

Pon = min 0,1 + 4 bar

Sizes: G1/2", G1"

PN250

Accuracy class: AC +5%

SG shut-off pressure class: up to 10%

application

Compressed natural gas (CNG),

nitrogen, CO2 and tech. gases

Type: 235-BV

PURPOSE

Safety shut-off valve (SSV) type 235-BV is designed to protect gas equipment and installations against

overpressure and to shut off gas automatically when system pressure reaches the upper or lower trip limit. The SSV can be reset only manually, after eliminating the cause of its trip (closure).

Inlet and outlet have threaded connections.

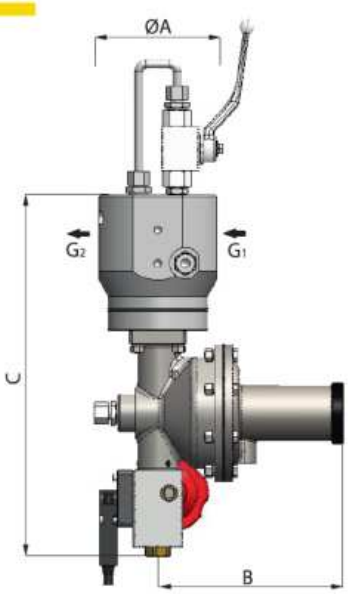

dimensions

DN	G1	G2	ØA	B	C
			(mm)		
15	1/2"	1/2"	104	165	315
25	1"	1"	114	165	323

diagram

item	description
1.	body
2.	valve disc
3.	spring
4.	stem
5.	Stem sleeve
6.	Latch tooth
7.	lever
8.	VP spring
9.	MR spring
10.	diaphragm
11.	Handwheel
12.	Toothed shaft
13.	Ball valve

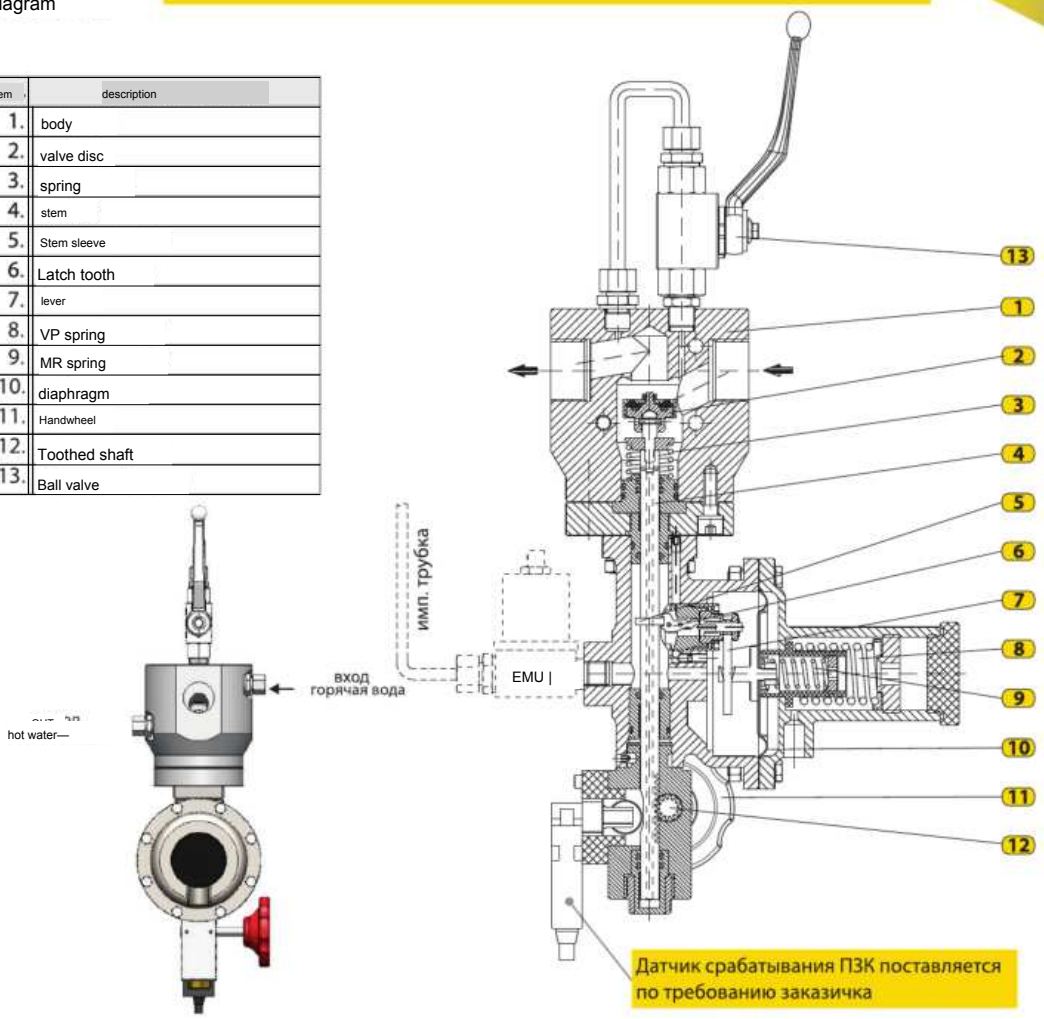

operation

Shut-off valve type 235-BV passes gas from the inlet port through the nozzle to the outlet connection. If regulator outlet pressure rises above or falls below the set operating pressure, the SSV trips and stops the gas supply.

Outlet pressure is fed through the impulse line beneath diaphragm (10) of the SSV latching mechanism. As pressure rises, the diaphragm assembly moves upward against HP spring (8), actuates lever (7) and releases latch tooth (6). Stem (4) is released; spring (3) presses closure member (2) onto the valve seat.

At low pressure, LP spring (9) pushes the diaphragm down; lever (7) releases latch tooth (6) and stem (4), so spring (3) seats closure member (2). Reset SSV manually: open ball valve (13) until pressures equalize, then turn handwheel (11) clockwise. Toothed shaft (12) locks stem (4), opens the seat and restores gas. Two body ports circulate heating medium to prevent freezing; BV heating uses hot water through body channels. Optional 3/2 solenoid valve automatically trips 235-BV to protect CNG installations

gas (CNG).

The manufacturer reserves the right to modify the design in order to improve it.

improvement.

SERIES
230

SAFETY SHUT-OFF VALVES

valves

SAFETY SHUT-OFF VALVE

GAS AND OIL HEATING SYSTEMS



Type: 236

parameters

Shut-off pressure: pi = 1,0 + 6,0 bar

Sizes DN25+DN150 PN16/63/100

ANSI150/300/600

Climate version: U and KhL (down to -60 °C)



Type: 236-BV

application

WATER

purpose

Safety shut-off valve (SSV) type 236 and 236-K is designed to protect the heating system

of gas and oil plants from high-pressure process fluid rupturing into the heat-medium piping. In an emergency or rupture into the gas/oil heating system, the valves automatically shut both the heat-medium supply and return lines. Type 236-K can also serve as a manual shut-off valve, eliminating a separate upstream isolating valve. Operating temperature: -10 to +110 °C; on request: -60 to +110 °C.

TYPE: 236

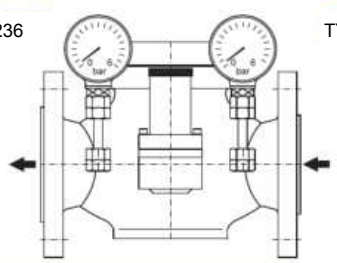

TYPE: 236-K

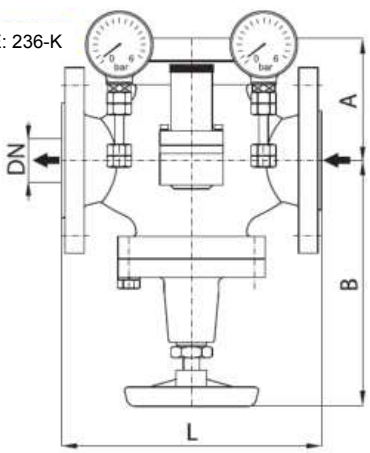

dimensions

PN16

DN / размеры		25	40	50	65	80	100	125	150
L	(mm)	160	200	230	290	310	350	410	450
A		75	110	115	140	160	180	195	205
B		200	230	245	250	300	355	365	375

materials

item	description	material	item	description	material
1.	Guide	Steel 08X18H10	5.	Spindle	Steel 08X18H10
2.	valve disc	Steel 08X18H10	6.	Wheel	aluminum
3.	stem	Steel 08X18H10	7.	Spring	Spring steel wire
4.	Valve disc	Steel 08X18H10	-	-	-

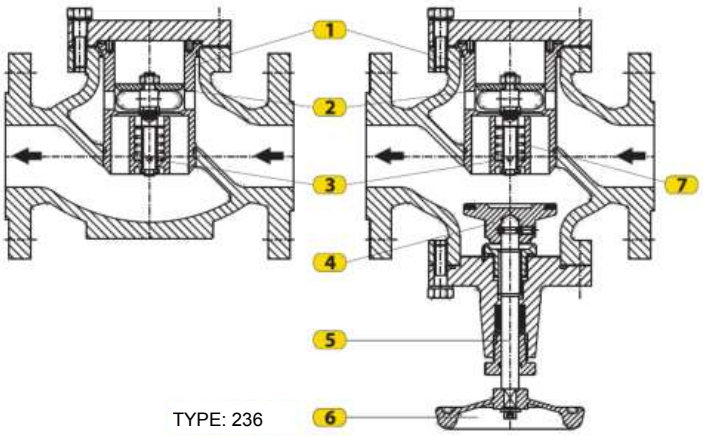

TYPE: 236

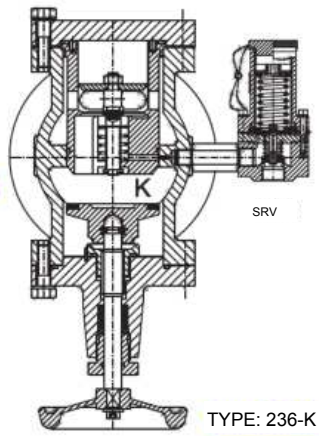

TYPE: 236-K

operation

Installation pressure reaches normally closed valve PK through channel K. At the limit, diaphragm force overcomes the spring and opens PK. Heat medium discharges through the PK seat, emptying chamber 1. The pressure difference across stem piston 3 moves stem and closure member 2, stopping flow through the SSV. To reopen, reduce SSV inlet pressure; pressure across piston 3 equalizes and spring 7 lifts member 2. Gauges monitor inlet and outlet pressure. Type 236-K closes manually with handwheel 6.

Installation diagram

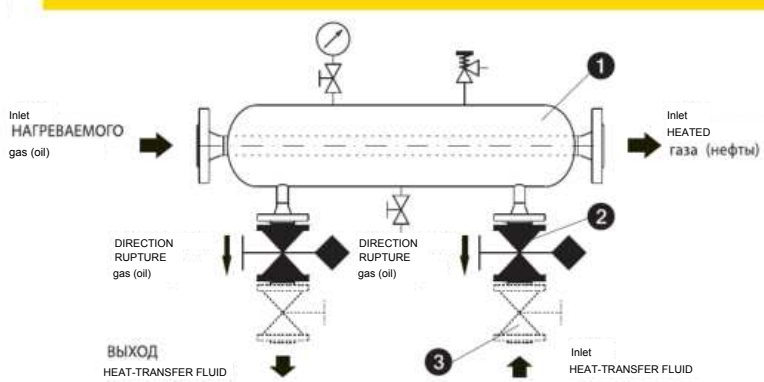

1. Heater
2. SSV

type 236-K (type 236)

3. Manual shut-off device

SSV type 236 and type 236-BV comply with SRPS EN ISO 4126-1. The manufacturer reserves the right to modify the design in order to improve it.

SERIES
230

SAFETY SHUT-OFF VALVES

valves

EXCESS-FLOW (EMERGENCY) VALVE



Type: 238-S



Type: 238-N



Type: 238-P

parameters

Sizes: G1/2"+G2" PN16-40, ANSI150 (type 238-N)

DN15–DN150 PN16–40, ANSI150 (type 238-S, type 238-P)

Climate version: U and KhL (down to -60 °C)

application

Propane-butane, natural gas, liquid ammonia, water and other fluids

purpose

Excess-flow (emergency) shut-off valves types 238-5, 238-N and 238-P are used in piping systems and installed on pressure vessels to stop process-fluid discharge when the recommended (design) flow rate is exceeded. They are also known as excess-flow limiting valves. They are used mainly in liquefied-gas (propane-butane) installations. Maximum working pressure: 16,7 bar.

TYPE: 238-S

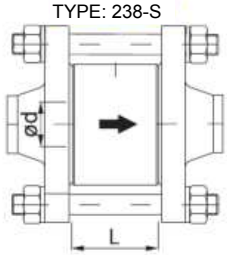

TYPE: 238-N

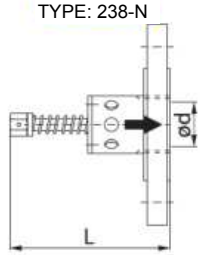

TYPE: 238-P

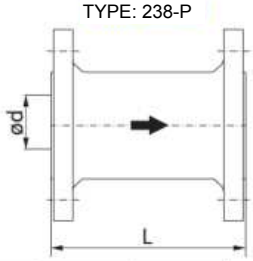

dimensions

238-S	DN	15	20	25	32	40	50	65	80	100
ØD	(mm)	15	20	25	32	40	50	65	80	100
L		50	50	50	62	62	60	70	70	80

238-N	DN	1/2"	3/4"	1"	11/4"	11/2"	2"
ØD	(mm)	14	19	24	33	39	52,6
L		45	50	60	70	85	157

238-P	DN	15	20	25	32	40	50	65	80	100
ØD	(mm)	15	20	25	32	40	50	65	80	100
L		120	120	142	142	142	142	142	180	180

operation

When no failure is present in the pipeline fitted with the excess-flow valve, fluid passes freely through the valve. A preset spring holds the disc in its normal position against the seat. Fluid passes through the radial holes in the seat, maintaining the operating parameters.

Closing (tripping) the excess-flow valve

If pressure in the pipeline drops sharply because a pipe or fitting ruptures, fluid velocity between the valve disc and seat rises, increasing force on the disc. This force overcomes the spring and closes the valve. A small uncontrolled leak to atmosphere may remain; therefore close the downstream shut-off device and isolate flow from the valve to the consumer. Fluid release from the installation is dangerous and prohibited. Quickly isolate the damaged pipeline, then repair or replace it.

Opening (resetting) the excess-flow valve

After an accident, isolate the damaged pipeline from the valve with the shut-off device. Once it is closed, fluid seeps through small holes (a) in the disc. Pressure upstream and downstream of the excess-flow valve gradually equalizes; the spring then lifts the disc off the seat. The valve opens automatically and returns to its normally open state

(ready for service again).

VALVE INSTALLATION

The excess-flow valve may be installed in the piping system in any orientation (horizontal,

vertical or inclined).

The trip flow of the excess-flow valve may equal or be below the operating parameters of the pipeline or installation. The flow direction, which is also the closing and locking direction, is marked by an arrow on valve body 1. All valve parts (body, seat, spring, threaded insert, etc.) have protective galvanic zinc coating or are made of stainless steel (disc).

parameters

Type: 238-N

G / parameter	1/2″	3/4″	1″	11/4″	11/2″	2″
Q liquid	5,0	6,0	8,0	8,0	17,0	28,0
(Nm³) gas phase Φ_{phase}	150,0	180,0	200,0	200,0	450,0	950,0

Type: 238-5, 238-P

DN / parameter	15	20	25	32	40	50	65	80	100
Q liquid	4,0	4,0	6,0	12,0	12,5	17,0	22,5	32,0	60,0
(Nm³) gas phase Φ_{phase}	140,0	140,0	200,0	200,0	450,0	500,0	500,0	1000,0	2000,0

Gas-phase flow parameters are specified at p = 3,5 bar. If the customer's installation requires a shut-off pressure above 3,5 bar, the parameter values will change accordingly.

тип: 238-S

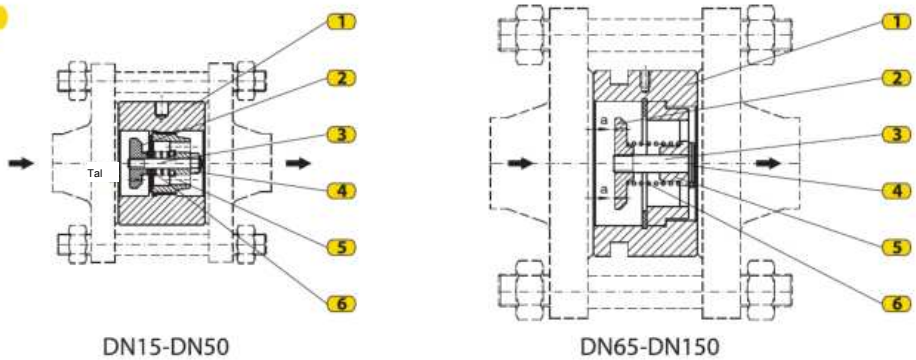

Nos.	description	material	item	description	material
1.	Valve body	Steel St3ps/St3sp	4. | Clamping nut/pin		steel
2. | Disc		Steel 08X18H10	5.	Stem end/spring end	Steel 08X18H10
3. Stem		Steel 08X18H10	6. Spring		Spring steel wire

TYPE: 238-M

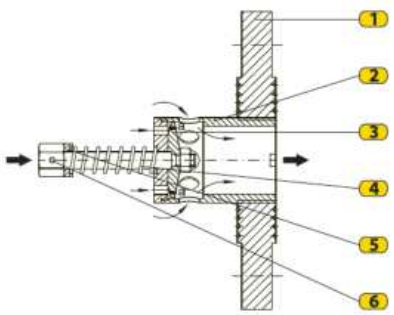

Nos.	description	material	item	description	material
1.	Flange	Steel 30GSL	4. | Spring		Spring steel wire
2. Seat		Steel 30GSL	5.	Shim washer	steel
3. | Disc		Steel 08; 08kp	6. | Pin		Steel

TYPE: 238-P

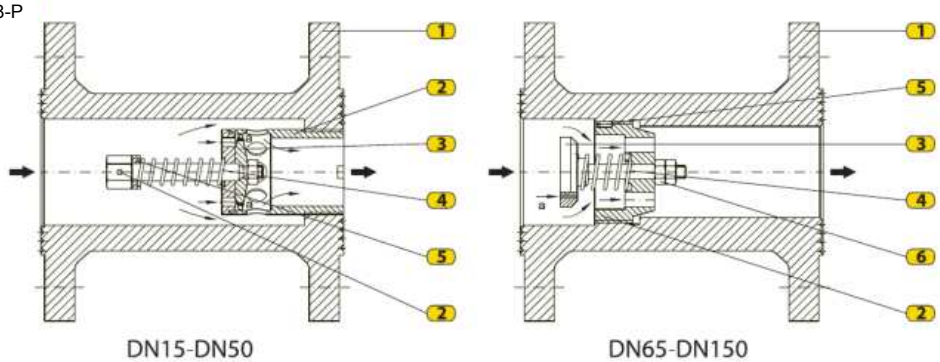

item	description	material	item	description	material
1.	Valve body	Steel 30GSL	4. | Spring		Spring steel wire
2. Seat		Steel 30GSL	5.	Threaded insert/shim washer	Steel
3. | Disc		Steel 08; 08kp	6.	Nut/pin	Steel

TESTING

Each valve is factory-tested before installation:

- for internal and external leakage;
- for flow capacity and operation.

Valve-body leak testing is performed to the applicable standard on a blanked-off pipeline. Maximum test pressure: 40 (60) bar. Capacity and functional tests verify valve closure when flow reaches 1,5-2 times the propane-butane (LPG) rated capacity, up to the actual closing flow. Correction

factors.

liquid propane	1,00	liquid ammonia	0,88
liquid acetone	0,80	methyl chloride |0,71	
liquid butane	0,94	liquid chlorine	0,59
liquid Freon	0,64	-	-

During testing, the flow rate must be known both in normal operation and at increased

flow (to verify valve closure).

Tests use air, inert gas or a technical fluid. Parameters for the specific fluid are determined using liquid- and gas-phase coefficients.

Note

On request, a combined unit (breakaway valve + shut-off valve + cock) is supplied to protect the pipeline against rupture. If the gas pipeline breaks or slips, the breakaway valve closes automatically. Manual closing of the cock and shut-off valve permits servicing and adjustment of the breakaway valve.

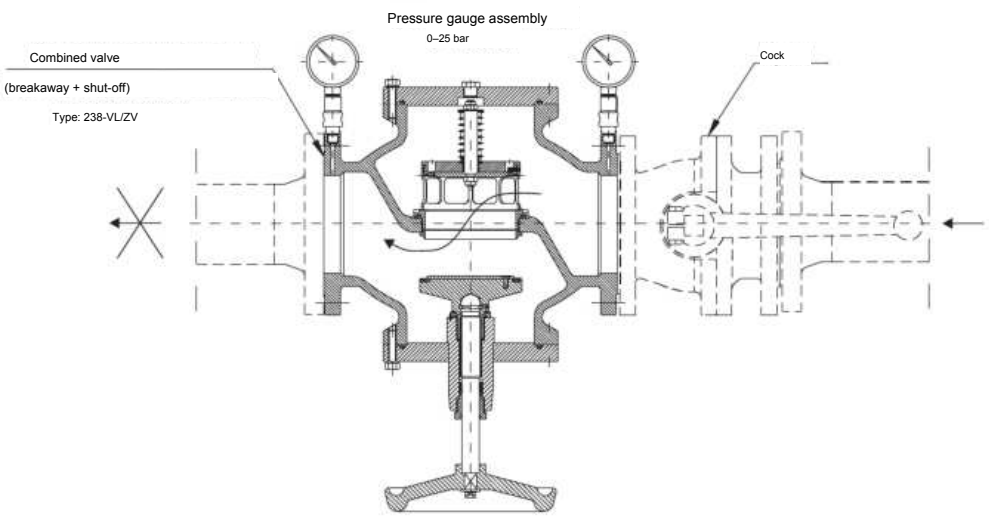

Breakaway valves 238-S, 238-N and 238-P meet SRPS M.E0.052:1990. The manufacturer reserves the right to modify the design for improvement.

SERIES
240

CHANGEOVER DEVICES FOR SAFETY

VALVES (DISTRIBUTION HEADS)

CHANGEOVER DEVICE FOR TWO SAFETY VALVES



Type: 242

parameters

Sizes: DN25 - DN150

PN16/25/40/100; ANSI150, 300/600

climatic version: U and KhL (down to -60 °C)

application

natural gas, propane-butane

air, nitrogen and industrial gases

PURPOSE

In all vessels, tanks, propane-butane installations and other technical-gas and petroleum equipment, where installation of 2 safety valves is required, a changeover device is mandatory. Changeover device type 242 permits installation of 2 safety valves (threaded or flanged). They mount on the equipment using flanges (10). Main function of the changeover device: immediately and at any time isolate one safety valve, thereby enabling removal, repair, calibration and reinstallation.

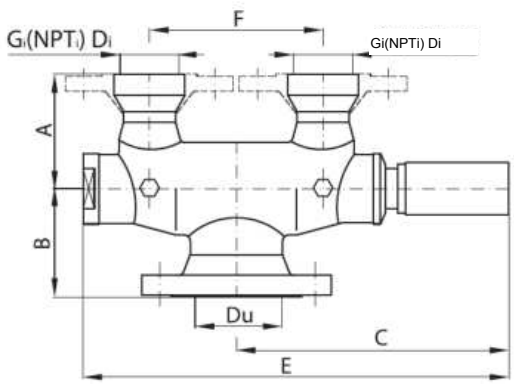

dimensions

SIZE / DN		40		50		65		80		100	150	
A	(mm)	105		105		145		145		145	165	
B		105		110		135		135		135	165	
C		210		210		340		340		340	400	
D_u		40		50		65		80		110	150	
E		330		330		530		530		530	600	
F		135		135		215		215		215	260	
$G_i(NPT_i)$		1"	11/4"	11/4"	11/2"	2"	21/2"	2"	21/2"	21/2"	3"	4"
D_i		25	32	32	40	50	65	50	65	65	80	100

materials

item	item description	material	item	item description	material
1.	body	Steel 30GSL	6.	Pusher	Brass LS-58-3
2.	Threaded branch	Steel St3ps; St3sp	7.	cover	Al alloy AK9ch
3.	Distributor	Steel St3ps; St3sp	8.	Stem support member	Steel St3ps; St3sp
4.	valve disc	Steel St3ps; St3sp	9.	Seal	PTFE
5.	stem	Steel 08Kh18N10	10.	Flanges	Steel 30GSL

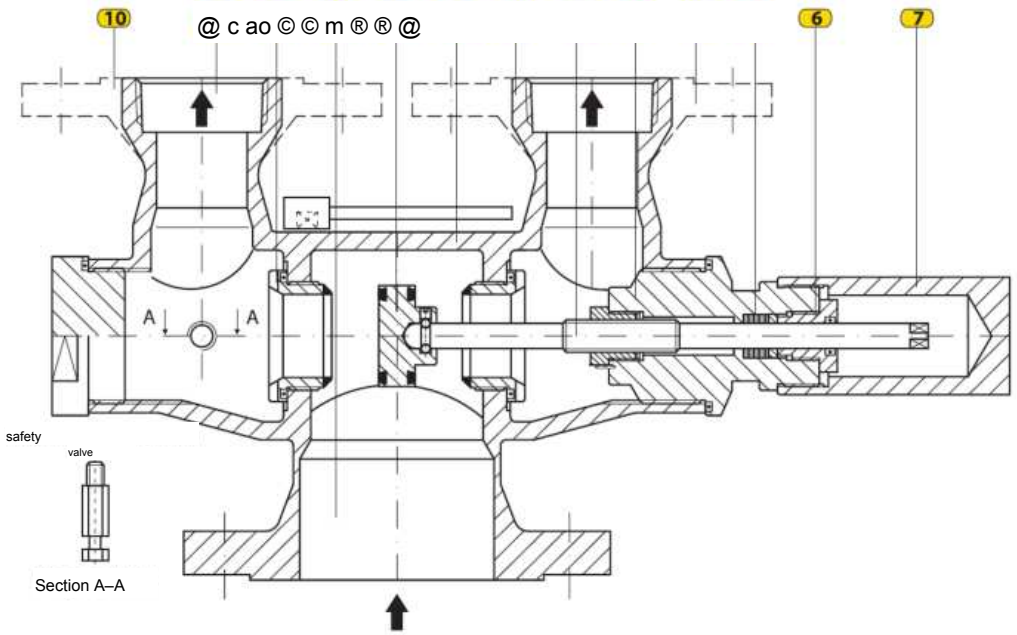

operation

During normal operation, changeover plug (4) is positioned as shown. Both safety valves respond to pressure rise in the vessel or other equipment because they have the same opening-pressure setting. If one safety valve fails, for example the left one, proceed as

as follows:

- unscrew cover (7);
- turn stem (5) clockwise until plug seal (4) seats on the distributor (3);
- unscrew the vent valve to release process fluid from the left chamber of the changeover device (this also checks device tightness);
- screw in the vent valve;
- unscrew or remove the failed safety valve and repair it;
- install a serviceable safety valve; return the stem and plug to the initial position.

If the other safety valve fails, follow the same procedure from the opposite side. A wrench for unscrewing and screwing the stem (5)).

On request, changeover device type 242 is supplied with another flanged or threaded connection.

The manufacturer reserves the right to modify the design to improve it.

SERIES
240

CHANGEOVER DEVICES FOR SAFETY

VALVES (DISTRIBUTION HEADS)

CHANGEOVER DEVICE FOR FOUR

SAFETY VALVES



Type: 244

parameters

Sizes: DN80–DN100

PN16/25/63/100; ANSI150, 300/600

climatic version: U and KhL (down to -60 °C)

application

natural gas, propane-butane

air, nitrogen and industrial gases

PURPOSE

Where 4 safety valves are required on vessels, tanks, propane-butane or other technical-gas installations and petroleum equipment, a changeover device is mandatory. Type 244 permits installation of 4 safety valves with threaded or flanged connections. It mounts to the equipment by flanges (8). Its main function is to isolate any one safety valve immediately, allowing removal, repair, calibration and reinstallation.

dimensions

DN / SIZE		80		100
A	(mm)	135		145
B		135		135
C		330		330
D_u		80		100
E		180		180
G_i(NPT$_i$)		2"	1½"	21/2"
D_i		50	65	65

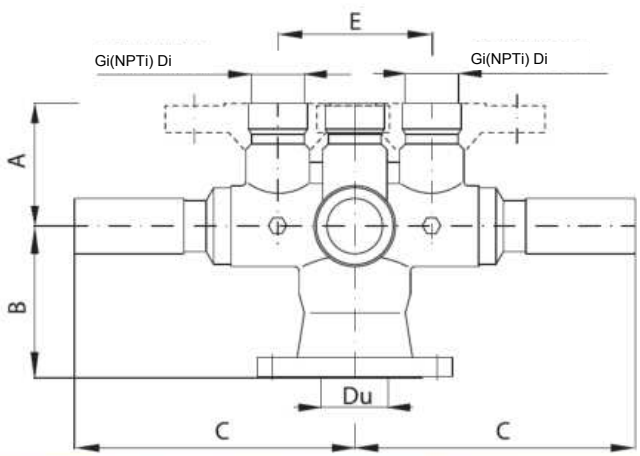

materials

Pos.	item description	material	Pos.	item description	material
1.	body	Steel 30GSL	6.	Sealing rings	NBR80
2.	Threaded branch	Steel St3ps; St3sp	7.	cover	Al alloy AK9ch
3.	valve disc	Steel St3ps; St3sp	8.	Stem support member	Steel St3ps; St3sp
4.	stem	Steel 08Kh18N10	9.	Flanges	Steel 30GSL

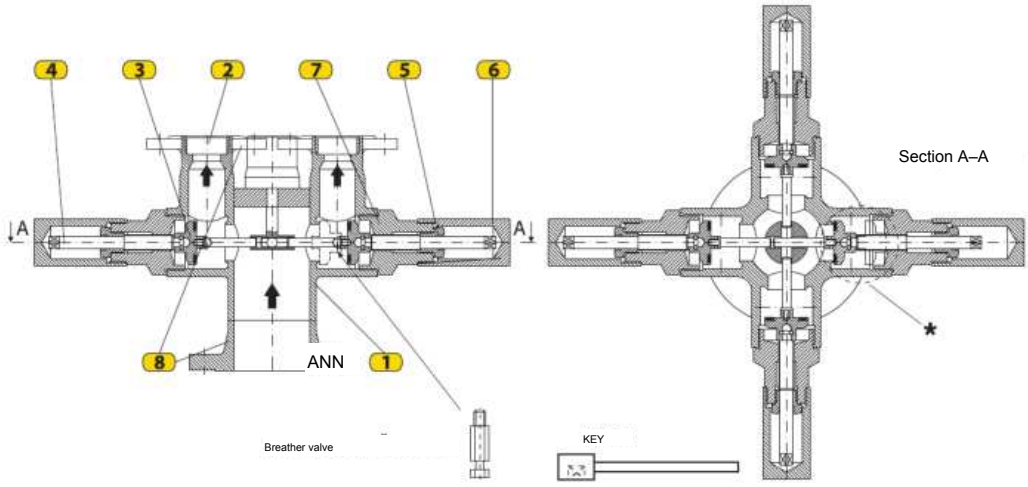

operation

During normal operation, changeover plug (3) is positioned as shown. All four safety valves respond to pressure rise in the vessel or other equipment because they have the same opening-pressure setting. If one valve fails, for example the left one, proceed as

follows:

- unscrew the right-hand cover (6);
- turn the right-hand stem (4) clockwise until plug seal (3)

rests on the seat (right figure-*);

distributor (3)

- unscrew the vent valve to release process fluid from the left chamber of the changeover

device (this also checks device tightness);

- screw in the vent valve;
- unscrew or remove the failed safety valve and repair it;
- install a serviceable safety valve; return the stem and plug to the initial position.

position.

If any other safety valve fails, follow the same procedure from the side of the failed valve. Only one safety valve may be out of service at a time. A wrench for turning the stem is supplied with the changeover device.

On request, type 244 is supplied with another flanged or

threaded connection.

The manufacturer reserves the right to modify the design to improve it

SERIES
320

FULL-BORE SHUT-OFF, MANUAL

CONTROL AND SHUT-OFF CHECK VALVES

FULL-BORE SHUT-OFF VALVE



Type: 321

parameters

Sizes: DN25 - DN150

PN16/25/40; ANSI150

climatic version: U and KhL (down to -60 °C)

application

natural gas, propane-butane

air, nitrogen and industrial gases

PURPOSE

Full-bore shut-off valve type 321 stops process-fluid flow through the pipeline. It is most often used in installations and equipment where propane-butane (liquefied petroleum gas) is the process gas. The permitted flow direction is shown in the drawings.

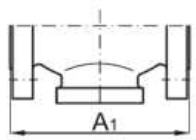

Valves manufactured to ASA standards:
Type: 321-VK

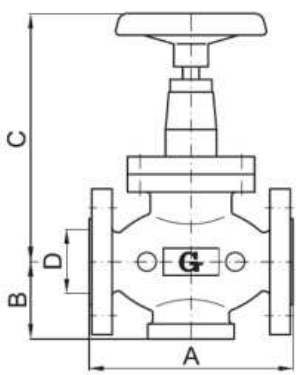

dimensions

DN / SIZE	25	32	40	50	65	80	100	150
A	160	180	200	230	290	310	350	450
A1	120	178	178	193	193	262	262	-
B	60	60	80	80	90	100	100	130
C	200	200	200	200	245	270	300	350
D	25	32	40	50	65	80	100	150

materials

item	item description	material	item	item description	material
1.	body	Steel 30GSL	7.	Adjuster	Brass LS-58-3
2.	valve disc	Steel St3ps	8.	Handwheel/handle	aluminum
3.	Spindle	Steel 08Kh18N10	9.	Seal 1	NBR80
4.	Threaded sleeve	Brass LS-58-3	10.	Gland packing	PTFE
5.	cover	Steel 20L	11.	Seal 2	NBR80
6.	Spindle support	Steel St3ps	12.	Ball	Bearing steel ShKh4

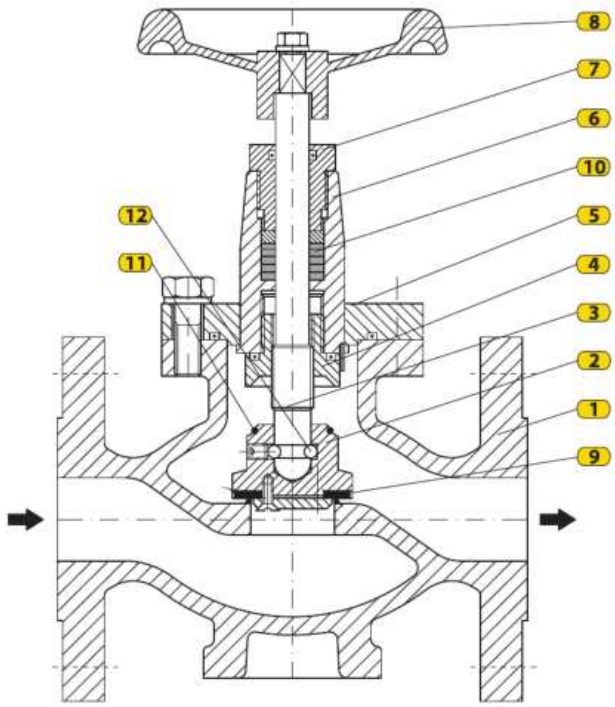

operation

Turning handwheel (8) clockwise moves spindle (3) down and brings plug (2) to the valve seat. The valve is fully closed when seal 1 (9) is tight against the seat. With the valve fully open, by turning the handwheel oppositely, seal 2 (11) on top of the plug presses against the conical part of sleeve (4), sealing between spindle and sleeve. This permits replacement of the spindle packing without removing the

valve from the pipeline.

This valve can also throttle flow by adjusting the plug position

relative to the seat.

The manufacturer reserves the right to modify the technical data presented in this catalog as the equipment production process is improved.

SERIES
320

FULL-BORE SHUT-OFF, MANUAL

CONTROL AND SHUT-OFF CHECK VALVES

FULL-BORE CONTROL VALVE



Type: 323

parameters

Sizes: DN25 - DN150

PN16/25; ANSI150

climatic version: U and KhL (down to -60 °C)

application

natural gas, propane-butane

air, nitrogen and industrial gases

purpose

Full-bore control valve type 323 stops process-fluid flow through the pipeline. It is most often used in installations and equipment where propane-butane (liquefied petroleum gas) is the process gas. The permitted flow direction is shown in the drawings.

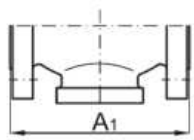

Valves manufactured to ASA standards:
Type: 323-VK

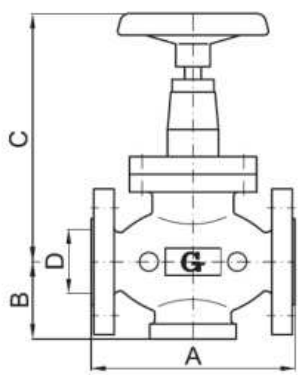

dimensions

DN / mere	25	32	40	50	65	80	100	150
A	160	180	200	230	290	310	350	450
A1	120	178	178	193	193	262	262	-
B	60	60	80	80	90	100	100	130
C	200	200	200	200	245	270	300	350
D	25	32	40	50	65	80	100	150

materials

item	item description	material	item	item description	material
1.	body	Steel 30GSL	7.	Adjuster	Brass LS-58-3
2.	valve disc	Steel St3ps	8.	Handwheel/handle	aluminum
3.	Spindle	Steel 08Kh18N10	9.	Seal 1	NBR80
4.	Threaded sleeve	Brass LS-58-3	10.	Gland packing	PTFE
5.	cover	Steel 20L	11.	Seal 2	NBR80
6.	Spindle support	Steel St3ps	12.	Plate	Steel St3ps

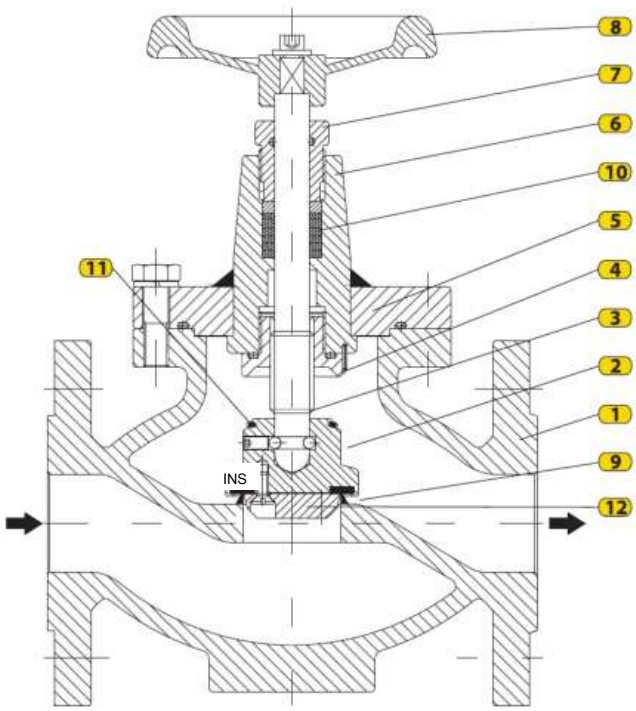

operation

Turning handwheel (8) clockwise moves spindle (3) down and brings plug (2) to the valve seat. The valve is fully closed when seal 1 (9) is tight against the seat. With the valve fully open, by turning the handwheel oppositely, seal 2 (11) on top of the plug presses against the conical part of sleeve (4), sealing between spindle and sleeve. This permits replacement of the spindle packing without removing the

valve from the pipeline.

This valve can also throttle flow by adjusting the plug position

relative to the seat.

The manufacturer reserves the right to modify the technical data presented in this catalog as the equipment production process is improved.

SERIES
320

FULL-BORE SHUT-OFF, MANUAL

CONTROL AND SHUT-OFF CHECK VALVES

SHUT-OFF CHECK VALVE



Type: 325

parameters

Sizes: DN25 - DN150

PN16/25/40; ANSI150

climatic version: U and KhL (down to -60 °C)

application

natural gas, propane-butane

and industrial gases

purpose

Full-bore combined shut-off check valve type 325 has two functions. It acts as a shut-off valve, stopping process-fluid flow through the pipeline, and as a check valve. The permitted flow direction is shown in the drawings.

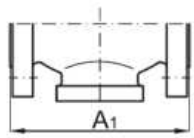

Valves manufactured
to ASA standards:
Type: 325-VK

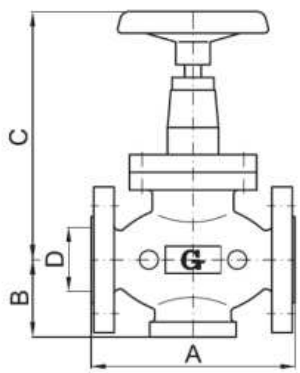

dimensions

DN / mere	25	32	40	50	65	80	100	150
A	160	180	200	230	290	310	350	450
A1	120	178	178	193	193	262	262	-
B	60	60	80	80	90	100	100	130
C	200	200	200	200	245	270	300	350
D	25	32	40	50	65	80	100	150

materials

item	item description	material	item	item description	material
1.	body	Steel 30GSL	7.	Adjuster	Brass LS-58-3
2.	valve disc	Steel St3ps	8.	Handwheel/handle	aluminum
3.	Spindle	Steel 08Kh18N10	9.	Seal	NBR80
4.	Threaded sleeve	Brass LS-58-3	10.	Gland packing	PTFE
5.	cover	Steel 20L	11.	Plate	Steel St3ps
6.	Spindle support	Steel St3ps	12.	spring	Spring steel wire

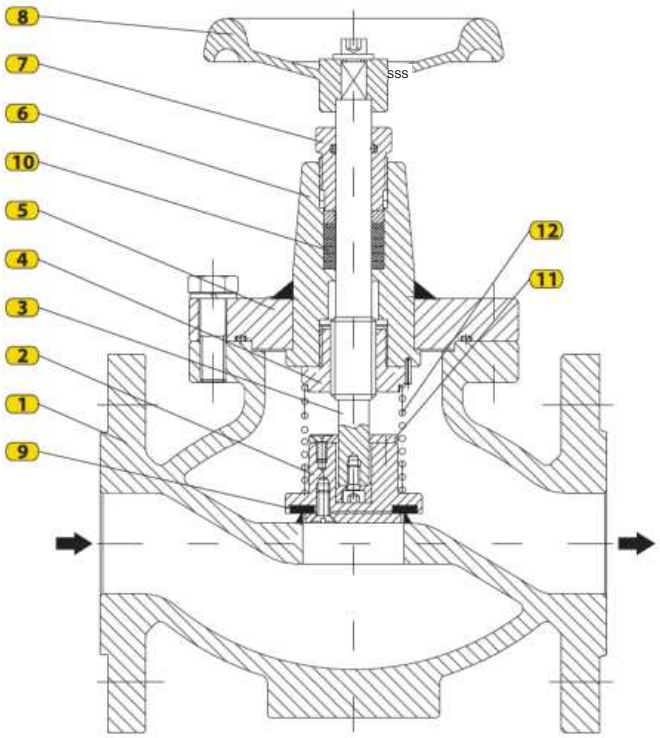

operation

Turning handwheel (8) clockwise moves spindle (3) down and brings plug (2) to the seat. The valve is fully closed when seal (9) is tight against the seat. In the open position, type 325 acts as a check valve. Spring (12) presses plug (2). When pressure below the plug is equal to or lower than pressure above it, the valve closes and prevents reverse process-fluid flow.

The manufacturer reserves the right to modify the technical data presented in this catalog as the equipment production process is improved.

SERIES
330

ELECTROPNEUMATIC
valves

ELECTROPNEUMATIC VALVE

diaphragm



parameters

Working pressure: p=0.3–10 bar

Sizes: DN25–DN250 PN16/25/40, ANSI150

Type: 331

application

natural gas, propane-butane

AIR AND TECHNICAL GASES

APPLICATION ===

Electropneumatic valve type 331 is used primarily to shut off the pipeline

to protect gas installations and equipment.

The electropneumatic valve can be operated manually and/or automatically. Closing and opening speeds can be set independently on the valve to suit the required conditions. Its main purpose is to protect large gas consumers by rapidly shutting the pipeline while allowing gradual adjustment of valve opening speed.

dimensions

DN	A (mm) PN16/ANSI150	B (mm)	C (mm)
25	160	95	61
40	200	156,5	75
50	230	154,5	82,5
65	290	190	115
80	310	215	120
100	350	234	150
150	450	325	200
200	600	454	258

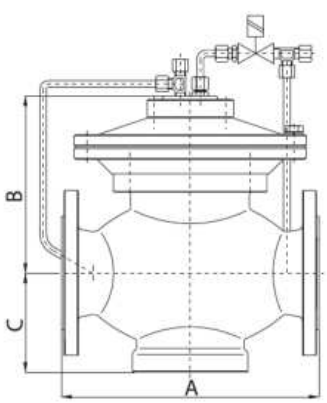

diagram

item	description	item	description
1.	Valve body	6.	diaphragm
2.	Injector	7.	spring
3.	Lower diaphragm chamber	8.	Solenoid valve (Ex)
4.	Upper diaphragm chamber	9.	Opening-speed regulator
5.	spring housing	10.	Closing-speed regulator

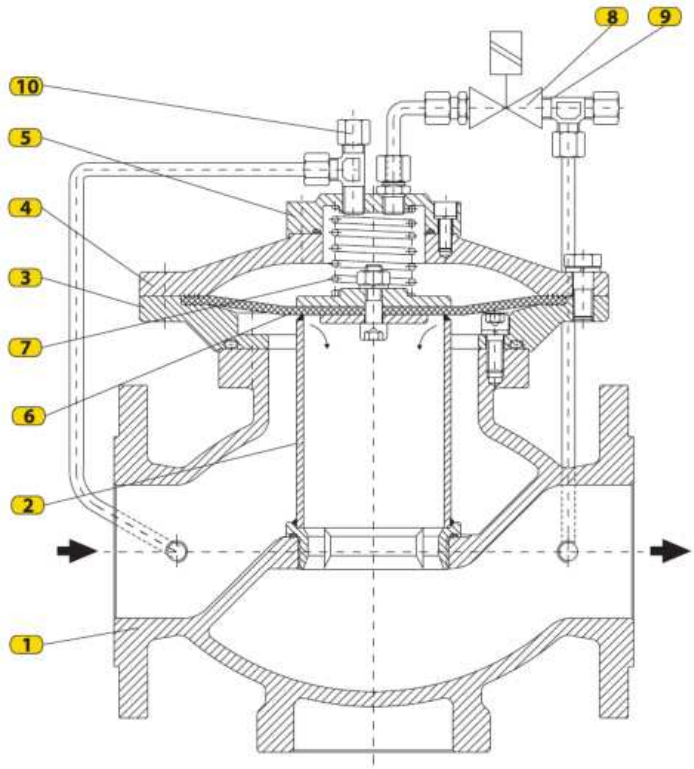

operation

Gas flow in body (1) is controlled by diaphragm (6). With solenoid (7) de-energized, gas passes via restrictor (10) to upper chamber (4); with spring (7) it presses the diaphragm onto nozzle (2). When the solenoid opens, chamber (4) vents to the outlet via restrictor (9). Inlet pressure in chamber (3) lifts the diaphragm and opens the nozzle. When the solenoid closes, chamber (4) repressurizes and the spring closes the nozzle. Restrictor (10) sets closing speed, (9) opening speed.

INSTALLATION

The electropneumatic valve is installed between standard flanges. All components are protected against corrosion by zinc plating or painting.

The manufacturer reserves the right to change the product technical data in order to improve product manufacturing.

SERIES
340

PNEUMATIC
valves

ELECTROPNEUMATIC VALVE
PISTON



Type: 344

parameters

Working pressure: pp max. = 16; 25; 50; 75 bar

Operating voltage: 230 V AC (12/24 V DC on request)

Sizes: DN80–DN300 PN16/25, ANSI 150/300/600

Manufactured in accordance with the standard:
SRPS EN 161, SRPS EN 13611

application

NATURAL GAS, OTHER FUELS,

AIR AND TECHNICAL GASES

APPLICATION

Electropneumatic valve type 344 is used primarily to shut off the pipeline,

to protect gas installations and equipment.

The electropneumatic valve can be operated manually and/or automatically. Closing and opening speeds can be set independently on the valve to suit the required conditions. Its main purpose is to protect large gas consumers by rapidly shutting the pipeline while allowing gradual adjustment of valve opening speed.

dimensions

DN	A (mm)				
	PN16	PN25	ANSI150	ANSI300	ANSI600
80	298	317	298	317	337
100	352	368	352	368	394
150	451	473	451	473	508
200	543	568	543	568	610
250	673	708	673	708	752
300	737	775	737	775	819

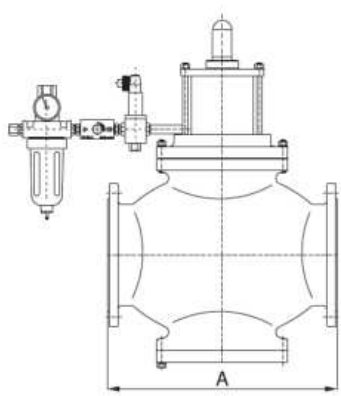

Pos. | NAME | No. | NAME

1.	Valve body	6.	Gas piston
2.	seat	7.	Solenoid valve 3/2 – NZ
3.	stem	8.	Opening-speed regulator
4.	Air piston	9.	Air preparation unit
5.	spring	10.	Position-indicator assembly

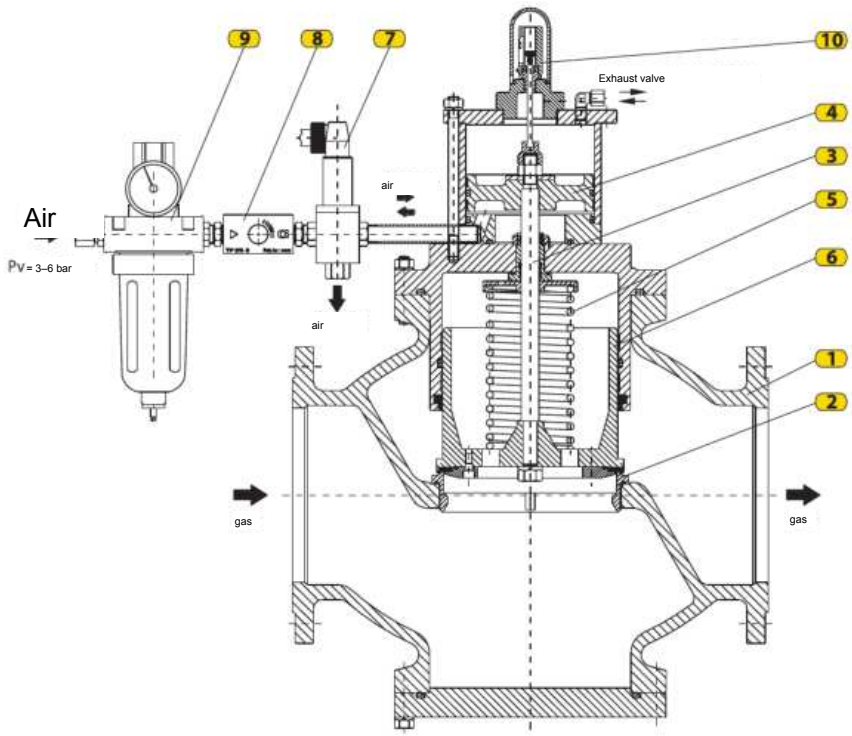

operation

Gas flow in body (1) is controlled by piston (6). With solenoid (7) de-energized, spring (5) presses piston (6) onto seat (2). Energizing it supplies 3–6 bar air below piston (4), opening the valve; de-energizing vents air and closes it. Restrictor (8) sets opening speed. Two switches (10) show piston (6) open/closed and signal the monitoring system. Unit (9) conditions plant air for cleanliness, oil content and pressure before the control unit.

INSTALLATION

The electropneumatic valve is installed between standard flanges. All components are protected against corrosion by zinc plating or painting. Valve control and operation can be fully adapted to customer requirements, including the operating principle described above.

The manufacturer reserves the right to change the product's technical data to improve the product.

SERIES
340

PNEUMATIC
valves

PNEUMATIC VALVE

diaphragm



Type : 344-M



Type: 344-M/K

parameters

Sizes: DN25 - DN150

PN16-PN160, ANSI150/300/600

application

natural gas, propane-butane

and industrial gases

purpose

Pneumatic valve type 344-M is used to shut off pipelines, primarily to protect gas and oil installations and equipment. It may be operated manually and/or automatically. Type 344-M/K also functions as a manual shut-off valve. It has an Ex-rated solenoid valve and an air filter regulator. The special actuator–diaphragm linkage lets the fail-safe function be changed between opening and closing to suit the user by repositioning the installed

components.

dimensions

DN	A (mm)					
	PN16	PN25	PN64	ANSI150	ANSI300	ANSI600
25	160	160	210	184	197	210
50	230	230	286	254	267	286
65	290	290	311	276	292	311
80	310	310	337	298	317	337
100	350	350	394	352	368	394
150	450	450	508	451	473	508

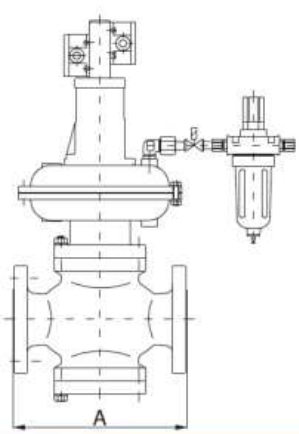

diagram

item	description	item	description
1.	Valve body	6.	diaphragm
2.	valve disc	7.	Handwheel
3.	Solenoid valve	8.	Spindle
4.	spring	9.	valve disc
5.	stem	10.	Air pressure regulator

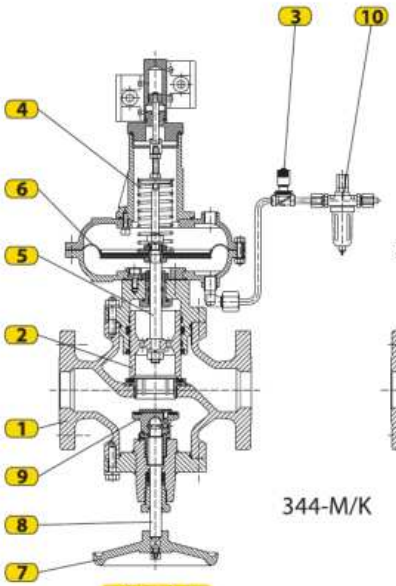

Рис. 1.1

344-M/K

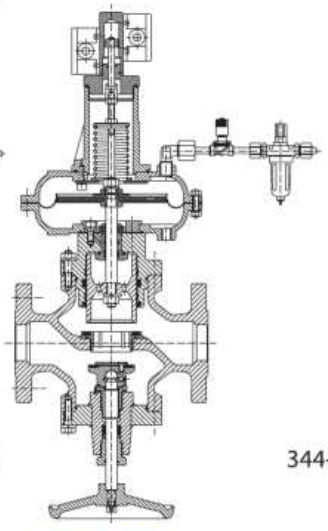
Рис. 1.2

344-M

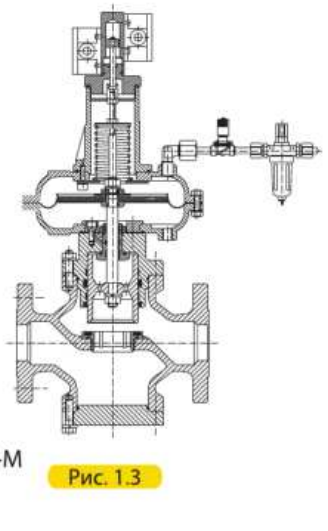
Рис. 1.3

operation

Gas flow in body (1) is controlled by plug (2). Normally closed (Fig. 1.1), solenoid (3) de-energized, spring (4) through diaphragm and stem (5) seats plug (2). Air below diaphragm (6) opens; venting closes. Normally open (Fig. 1.2), spring (4) holds plug (2) up; air above (6) closes, venting opens. The 344-M/K has manual shut-off below: handwheel (7), spindle (8) and plug (9) close against the underside of seat (1). The 344-M without manual shut-off is

shown in Figure 1.3.

INSTALLATION

The solenoid valve is installed between standard flanges. All components are protected against corrosion by zinc plating or painting.

The manufacturer reserves the right to change the product technical data in order to improve

product manufacturing.

SERIES
350

CHECK VALVES

non-return valve



Type: 351

parameters

Sizes: DN25–DN100 PN16/25/40, ANSI 150/300

Climate version: U and KhL (down to −60 °C)

application

NATURAL GAS, PROPANE-BUTANE,

air, nitrogen and industrial gases

PURPOSE

Check valve type 351 is used in installations and equipment where it is necessary to prevent reverse flow of the process medium.

It is flange-mounted on the pipeline. The permitted flow direction of the process medium is shown in the drawings.

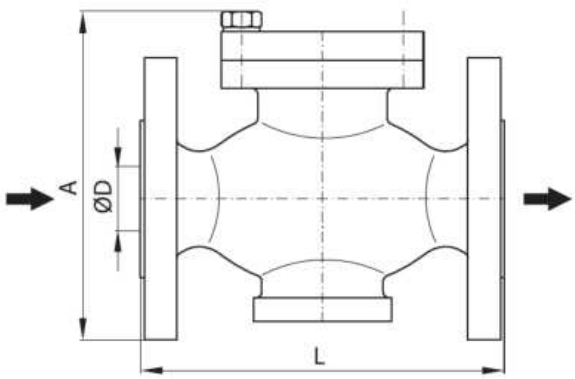

dimensions

SIZE \ DN		25	32	40	50	65	80	100
ØD	(mm)	25	32	40	50	65	80	100
A		150	135	180	195	230	250	275
L		160	180	200	230	290	310	350

materials

item	item description	material
1.	body	Steel 1330
2.	valve disc	Steel 0545
3.	stem	Steel 4580
4.	Guide bush	CuZn40
5.	cover	Steel 0361
6.	Seal	NBR80
7.	spring	wire

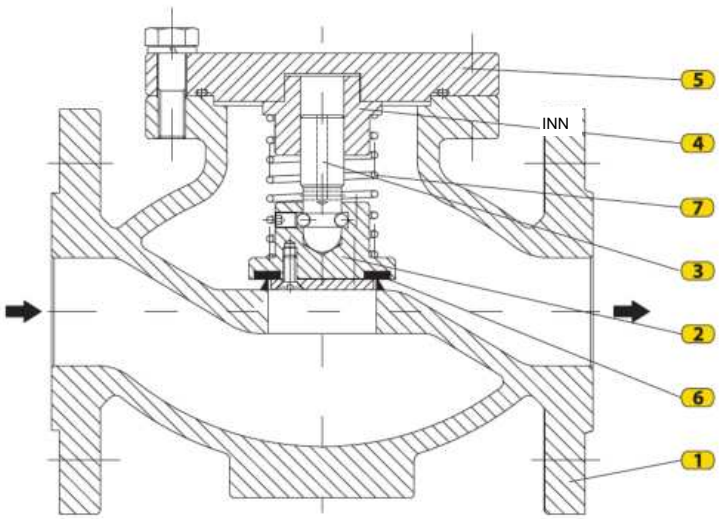

operation

Process-medium pressure acts on plug (2) and compresses spring (7), opening the passage through the valve seat. Spring sizing is based on

working pressure and vertical or inclined mounting. Spring (7) presses disc (2) and seal (6) onto the seat, preventing reverse flow. Process medium that has passed through the seat

additionally presses the plug, preventing it from lifting and opening the valve.

INSTALLATION

Check valve type 351 may be installed on horizontal, vertical or inclined pipelines. The spring ensures correct seating of the plug seal on body seat (1) in every position. The valve is easy to install and maintain.

The manufacturer reserves the right to change the brochure's technical data when equipment manufacturing is improved.

SERIES
360

CHECK VALVES

non-return valve



Type: 363

parameters

Working pressure: max. 100 bar

Sizes: DN15–DN150 PN16–100, ANSI 150–600

Climatic versions: U and KhL (down to −60 °C)

application

NATURAL GAS, PROPANE-BUTANE,

air, nitrogen and industrial gases

PURPOSE

Check valve type 363 is used in installations and equipment where reverse flow must be prevented of the process medium. It is installed between standard flanges and passes the process medium in the direction shown by the arrow (as shown). At distribution and metering-distribution stations it is installed downstream of the pressure regulator. Easy to install and maintain.

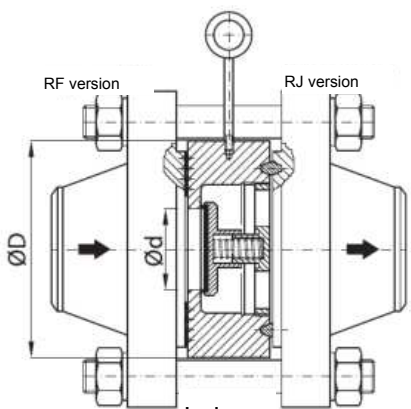

Lal

dimensions

DN	A	Ød	ØD					A	Ød	ØD
	(mm)		PN16	PN25/40	PN63/100	ANSI150	ANSI300	ANSI600		
15	40	10	53	53	63	48	54	45	15	52
20	40	15	63	63	63	57	66	50	15	64
25	40	20	73	73	84	67	72	55	20	70
32	40	27	84	84	94	76	82	55	27	80
40	58	35	94	94	105	86	94	55	35	92
50	58	40	109	109	115	104	111	60	40	108
65	63	50	129	129	140	123	129	65	50	127
80	63	65	144	144	150	136	148	65	65	146
100	80	80	164	170	175	174	180	80	80	190
125	90	100	194	194	211	195	214	90	100	238
150	100	125	220	224	248	221	249	100	125	262

materials

item	item description	material
1.	body	Steel 30GSL
2.	Thread plug	Steel 30GSL
3.	valve disc	Steel 08Kh18N10
4.	spring	Spring steel wire
5.	Handle	Steel 30Stps

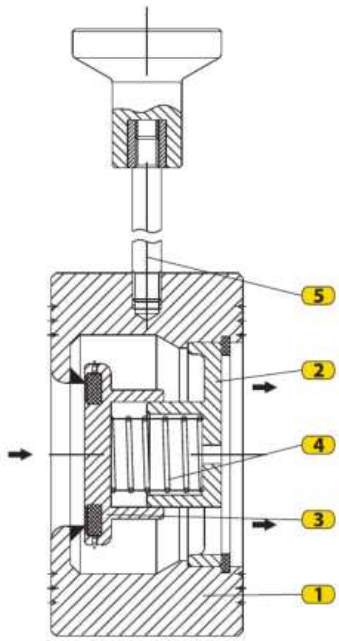

operation

Process-medium pressure acts on
disc (3) and compresses spring (4), opening the valve-seat passage.
The spring is set for operating pressure and is independent
of the valve's vertical or inclined position. With
reverse flow of the process medium, pressure force
and spring force press the plug onto the seat and make
reverse flow of the process medium
impossible. Spring (4) is located between plug (3) and
threaded insert (2), and is therefore additionally
protected against wear and contamination. The design
of the check valve shown is improved over
the standard version, especially in terms of
reliability and quiet operation.

INSTALLATION

Check valve type 363 may be installed on horizontal, vertical or inclined pipelines. Spring (4) ensures correct seating of plug seal (3) on body seat (1) in every position.

Valves are made for RF or RJ flange connections. The flanges between which the valve is installed must be parallel, with maximum permitted deviation of 3°, for correct seating of the sealing surfaces of the valve and

flange.

Body (1) has handle (5) for easier installation. All valve parts except the seal and handle are zinc-plated against corrosion. The handle is painted red.

Check valve type 363 complies with SRPS EN 558-1 and SRPS EN 12266 regarding main external and connection dimensions, operating and test pressures, etc. The manufacturer reserves the right to change the brochure's technical data as equipment manufacturing is improved.

SERIES
360

CHECK VALVES

COMBINED CHECK/CONTROL VALVE

FLOW LIMITER



Type: 368

parameters

Working pressure: max. 25 bar

Sizes: DN100–DN400 PN16/25, ANSI 150

Climatic versions: U and KhL (down to −60 °C)

application

NATURAL GAS, PROPANE-BUTANE,

AIR & TECHNICAL GASES

PURPOSE

Check valve 368 prevents reverse gas pressure and limits flow. Flow is set locally by hand or remotely by electric actuator; range 20–100%. Intended for high-capacity multiline stations, it protects regulators, safety valves and SSVs on unaffected lines and balances flow among lines. Manual setting uses a differential-pressure gauge as opening/flow indicator; remote control uses measured flow or differential pressure. Mount between standard flanges downstream of the regulator. Easy to install and operate.

dimensions

DN	A	Ød	ØD		
	(mm)		PN16	PN25	ANSI150
100	200	80	164	170	174
150	230	125	220	226	221
200	300	150	275	286	278
250	350	200	331	343	340
300	400	250	386	403	412
350	450	300	446	460	452
400	500	350	498	517	516

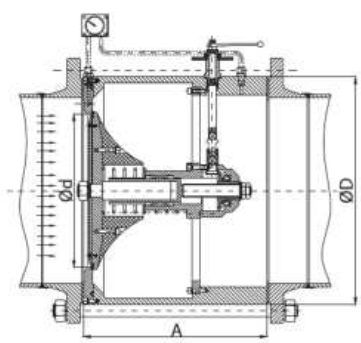

materials

item	item description	material
1.	body	Steel 1330
2.	valve disc	Steel 0361
3.	spring	Steel 2130
4.	Rod	Steel 4580
5.	Transmission mechanism	Steel 4732
6.	Differential-pressure gauge	Steel 4580

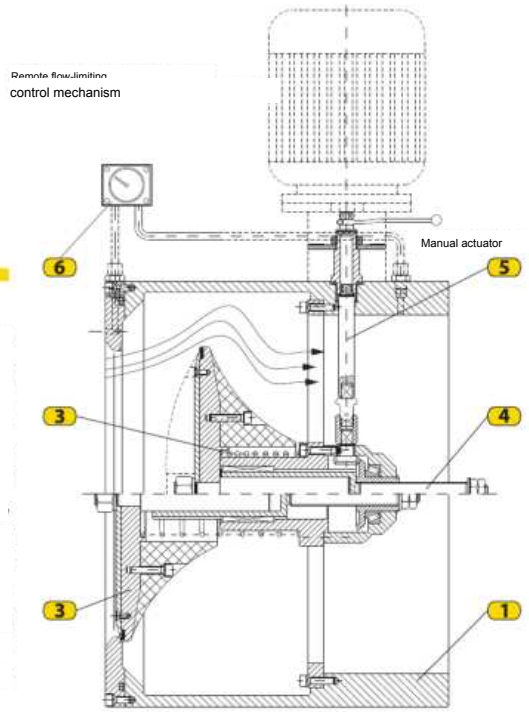

operation

As gas passes through the valve, it acts on the plug (position 2), pushes it back and compresses spring (position 3), bringing the valve to the open position. Rod (position 4) limits plug travel according to the required flow, while the transmission mechanism (item 5) only moves the stem. Flow restriction can be monitored on the differential-pressure gauge (item 6), because reduced flow causes a drop in differential pressure, and vice versa. If a pressure backsurge occurs, spring force moves the plug forward and closes the valve, preventing flow in the reverse direction. When gas pressure downstream of the plug falls, the valve automatically opens and operation resumes.

Installation

Check valve type 368 is installed in horizontal pipelines between standard flanges—wafer design.

The flanges between which the valve is installed MUST be parallel, with maximum permissible deviation 3°, to ensure correct contact of valve and flange faces. All steel valve parts are protected against corrosion by galvanizing.

application

1. Gas flow meter
2. Gas pressure regulator
3. Noise silencer
4. Vent line (vent stack)

SAFETY VALVE

5. Axial regulating check valve type: 368
6. Ball valve

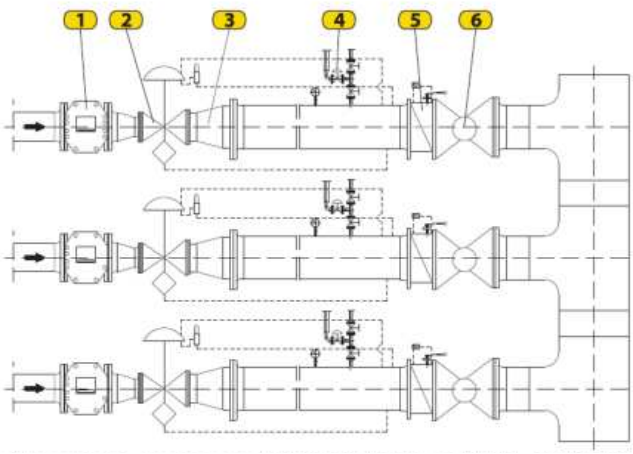

Check valve type 368 meets SRPS EN 558-1 and SRPS EN 12266 regarding face-to-face and connection dimensions, working and test pressures, etc. The manufacturer reserves the right to change the catalogue technical data as equipment production is improved.

SERIES
370

CONTROL-INSTRUMENT VALVES

PRESSURE-GAUGE UNLOADING VALVE

Type: 372/40



Type: 372/160



parameters

Working pressure: p=40 bar (type: 372/40)
p = 160 bar (type: 372/160)

Sizes: G1/4", G1/2" PN40/160

Climate version: U and KhL (to -60 °C)

application

NATURAL GAS, PROPANE-BUTANE,
air, nitrogen and industrial gases

purpose

Pressure-gauge unloading valve type 372 protects the gauge against continuous loading, extending its service life. Its design permits quick and easy pressure readings.

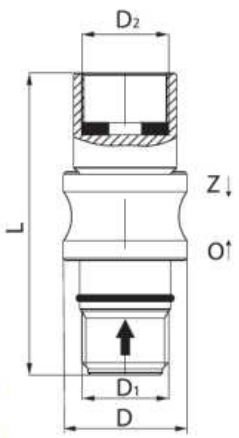

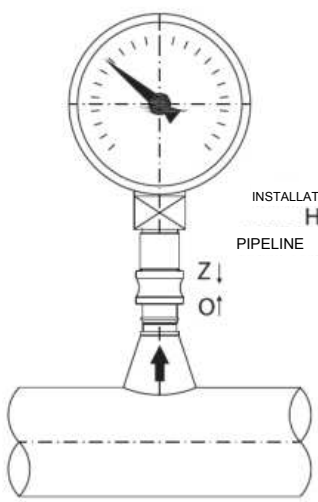

dimensions

DN	D_1	D_2	L (mm)	D (mm)
6	G(NPT) 1/4"		65	25
15	G(NPT) 1/2"		75	30

materials

Pos.	item description	material	
		372/40	372/160
1.	body	brass	Steel 4572
2.	Shaft		
3.	Sealing ring	NBR80	
4.	Gasket	NBR80	
5.	Retaining ring	Steel 2130	

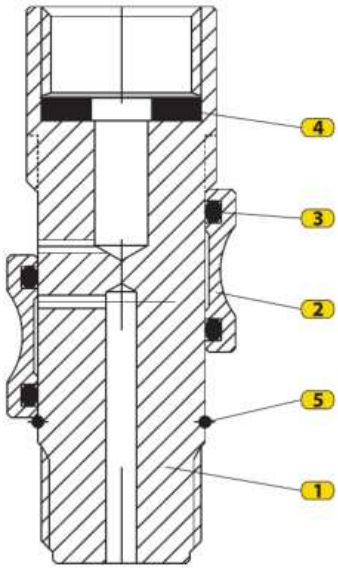

operation

The pressure-gauge unloading valve is closed when shaft (2) is in the extreme left position (marked 7 on body (1)). marked (7). When the shaft moves to the extreme right position (marked O on the valve body), it opens the passage for process fluid to the pressure gauge. Pressure can then be read. After reading the pressure, pressing button (3) moves the shaft to the left, closes the process-fluid passage and unloads the gauge. Thus, the pressure gauge is pressurized only during pressure measurement.

Installation

Install the gauge unloading valve on a welded pipeline fitting with internal or external thread.

The valve is made in 1/4" and 1/2" sizes in two versions: type 372/40 for pressure up to 40 bar, with brass working parts; and type 372/160 for pressure up to 160 bar, with steel working parts.

The manufacturer reserves the right to change the catalogue technical data as equipment production is improved.

SERIES 370

CONTROL-INSTRUMENT VALVES

THREE-WAY PRESSURE-GAUGE COCK

Type: 373/40



Type: 373/160



parameters

Working pressure: p=40 bar (type: 373/40)

p = 160 bar (type: 373/160)

Size: G1/2" PN40/160

Climate version: U and KhL (to -60 °C)

application

NATURAL GAS, PROPANE-BUTANE,

AIR, NITROGEN, TECH. GASES

purpose

Three-way cock type 373, with a suitable pressure gauge, measures pressure in pipelines and vessels. It permits connection of a reference gauge and its disconnection with excess-pressure relief. The simple design facilitates installation and maintenance. Versions with internal and external threaded connections are available.

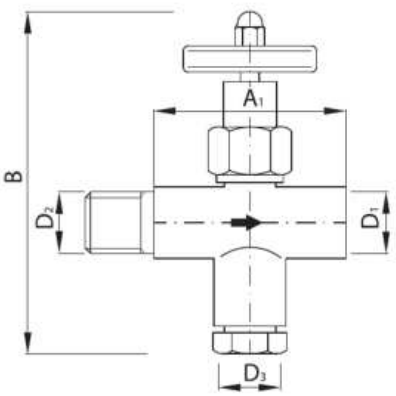

external threaded connection

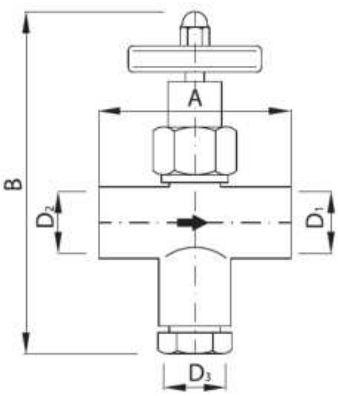

with internal threaded connection

Installation on

PIPELINE

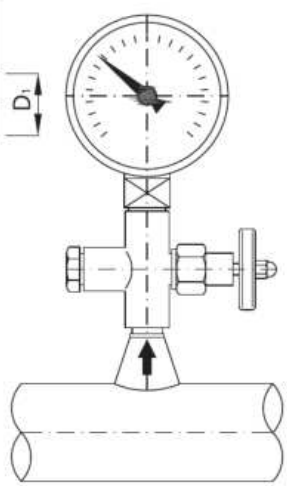

dimensions

DN	D_1	D_2	D_3	A	A_1	B
				(mm)		
15	G (MPT) 1/2"			72	82	130

materials

item	item description	material	
		373/40	373/160
1.	body	CuZn40	Steel 4320
2.	Conical plug	Steel 4150	Steel 4150
3.	Adjusting nut	CuZn40	CuZn40
4.	Guide sleeve	CuZn40	Steel 0545
5.	Spindle	Steel 4570	Steel 4570
6.	Handwheel	PE	PE
7.	Plug	CuZn40	CuZn40

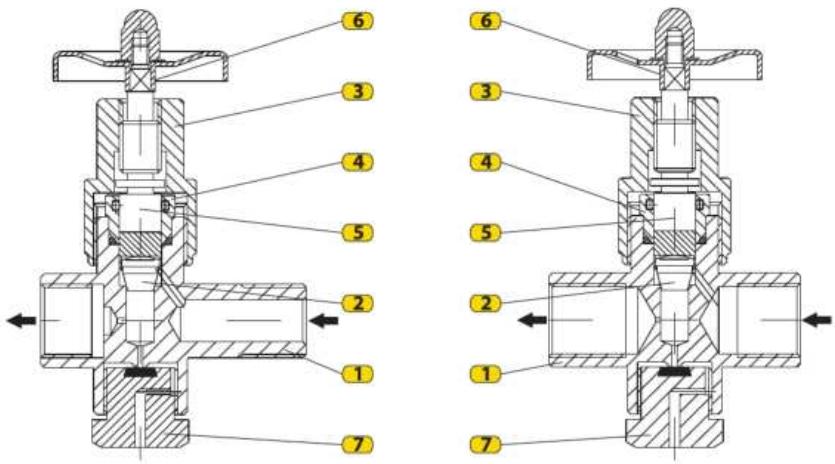

operation

Before installing the pressure gauge, the three-way cock is closed: conical plug (2) is tight on its seat and plug (7) is fully screwed in, closing the relief port. Install the gauge on the cock outlet coupling. Turning handwheel (6) counterclockwise raises spindle (5) and conical plug (2) from the seat, admitting process fluid to the gauge, which then indicates pressure.

To replace the reference pressure gauge:

- close the cock by turning handwheel (6);
- partly unscrew plug (7), relieve pressure inside the cock, then screw the plug back in;
- replace the reference gauge;
- open the cock.

INSTALLATION

Install the three-way cock on a welded pipeline fitting with internal or external thread.

The cock is made in size 1/2" in two versions: type 373/40 for pressure up to 40 bar, with working parts made of CuZn40; and type 373/160 for pressure up to 160 bar, with steel working parts.

The manufacturer reserves the right to change the catalogue technical data as equipment production is improved.

SERIES
370

CONTROL-INSTRUMENT VALVES

MANUAL CONTROL VALVE



Type: 376

parameters

Sizes: DN25–DN250 PN16

Climate version: U and KhL (down to −60 °C)

application

NATURAL GAS, PROPANE-BUTANE,

air, nitrogen and industrial gases

purpose

Manual control valve type 376 regulates flow in gas odorizers. It is also used for manual or automatic adjustment of the natural-gas/air mixture upstream of a burner. For automatic control, the valve actuator is a servomotor.

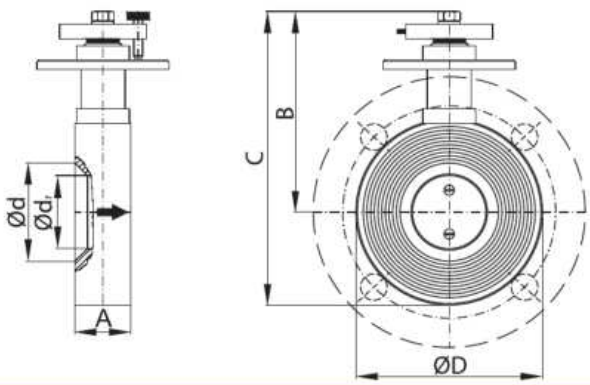

dimensions

DN / SIZE		25	32	40	50	65	80	100	125	150	200	250
Ød	(mm)	27	32	44	50	67	82	102	130	152	205	260
Ød1		22	25	32	40	50	65	80	105	125	180	200
ØD		71	81	94	106	127	142	162	182	218	275	331
A		38	38	38	38	38	38	38	38	38	38	38
B		108	112	120	130	140	148	158	168	186	215	243
C		143	153	167	183	203	219	238	259	295	350	408

materials

item	item description	material
1.	body	Steel 4580
2.	Shaft	Steel 4580
3.	Damper	Steel 0545
4.	Guide bush	CuZn40
5.	Locknut	Steel 0545
6.	Handwheel	Steel 0545
7.	Rotation scale	Sticker
8.	Indicator arrow	Steel 2130

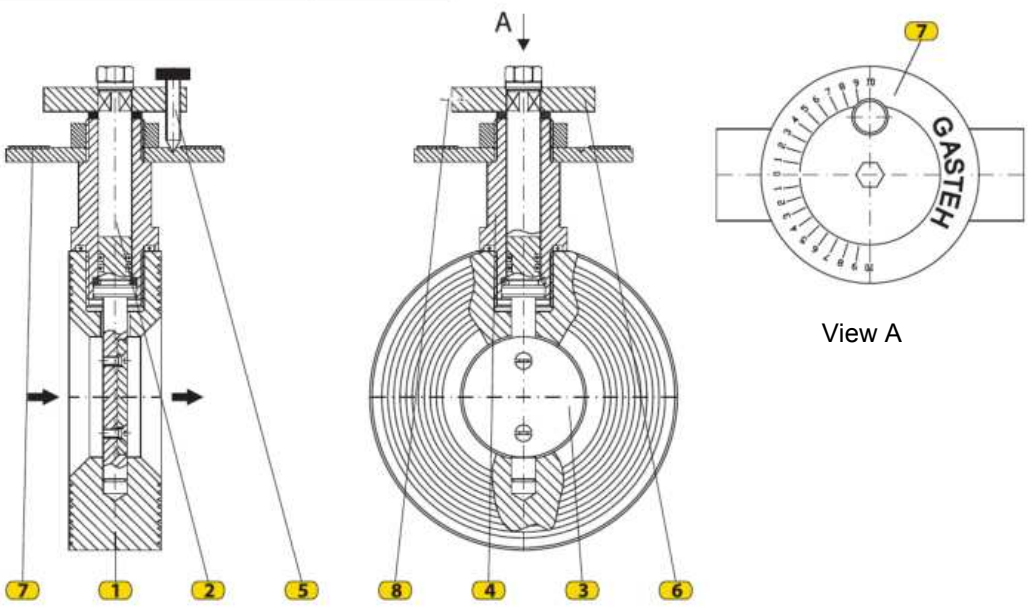

operation

Adjust the flow by setting damper (3) as follows:

- unscrew locknut (5);
- turning handwheel (6) in either direction rotates shaft (2), on which the damper (3);
- damper position relative to the valve seat proportionally controls flow;
- numbers 1 to 10 engraved on both sides of scale (7) indicate the flow adjustment level;
- indicator arrow (8) shows the adjustment level against the scale numbers;
- after adjustment, tighten locknut (5) to secure the required valve position.

INSTALLATION

Install the manual control valve between standard flanges.

The manufacturer reserves the right to change the catalogue technical data as equipment production is improved.

SERIES 410

GAS FILTERS

DIRT TRAP



Type: 411

parameters

Sizes: DN25–DN150 PN16/25, ANSI150

Climate version: U and KhL (down to −60 °C)

application

NATURAL GAS, PROPANE-BUTANE,

air, nitrogen and industrial gases

purpose

Dirt trap type 411 is used at distribution and metering-distribution stations to protect sensitive devices against contaminants carried by the process fluid. It is applied where removal of coarse debris from the pipeline is sufficient and also serves as a filter on standby lines of metering-distribution stations. The dirt trap is easy to operate and maintain.

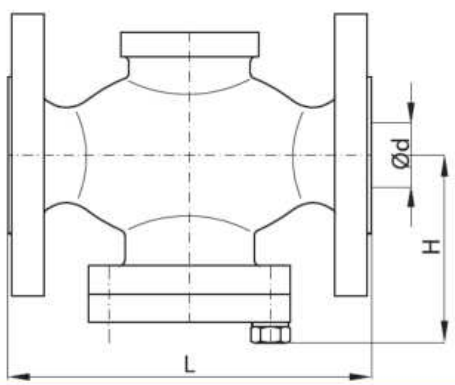

dimensions

SIZE \ DN		25	32	40	50	65	80	100	125	150
ØD	(mm)	25	32	40	50	65	80	100	125	150
L		160	180	200	230	290	310	350	400	450
H		93	93	105	116	142	158	178	200	240

materials

item	description	material
1.	Valve body	Steel 1330
2.	cover	Steel 0361
3.	Filter element	Steel 4580 mesh
4.	Sealing ring	NBR80
5.	Screw	Steel 8.8

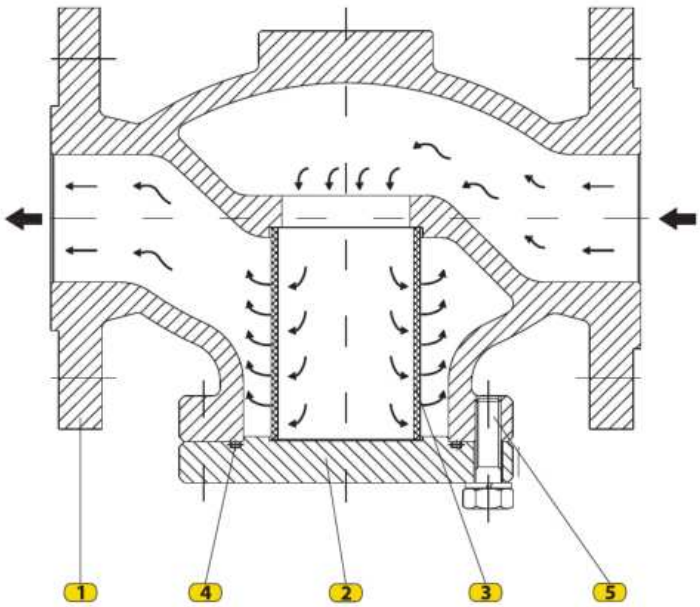

Installation

Install dirt trap type 411 horizontally in the pipeline, with cover (2) downward. Body (1) contains a wire-mesh filter element (3) that retains debris. Mesh size and type, single or double, depend on the process fluid and contamination. It removes 95% of particles larger than 0.2 mm. Permitted gas-flow direction is shown in the drawing. Service consists of visually checking element (3); clean or replace it as necessary.

Dirt trap type 411 meets the following requirements:

SRPS EN 558-1 — installation dimensions;

SRPS EN 1092-1 — connection dimensions.

The manufacturer reserves the right to modify the technical data presented in this catalog as the equipment production process is improved.

SERIES
410

GAS FILTERS



Type: 413

GAS FILTER WITH PERMANENT CARTRIDGE

parameters

Sizes: DN25–DN150 PN16/25, ANSI150

Climate version: U and KhL (to -60 °C)

application

NATURAL GAS, PROPANE-BUTANE,

air, nitrogen and industrial gases

purpose

Gas filter type 413 is used at distribution and metering-distribution stations, and other installations, to protect sensitive devices from contaminants carried by the process gas. Its body contains a durable mesh cartridge with a mesh density providing the required

filtration level.

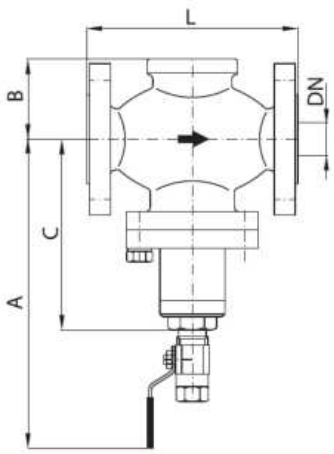

dimensions

SIZE \ DN		25	32	40	50	65	80	100	150
L	(mm)	160	180	200	230	290	310	350	450
A		235	235	245	253	275	287	390	445
B		60	60	70	75	100	120	120	150
C		135	145	155	163	185	197	280	355

materials

item	description	material
1.	Filter body	Steel NI400-12
2.	cover	Steel 0361
3.	Filter element	Stainless steel (mesh)
4.	Threaded ball valve	Steel 1330
5.	Sealing ring	NBR80

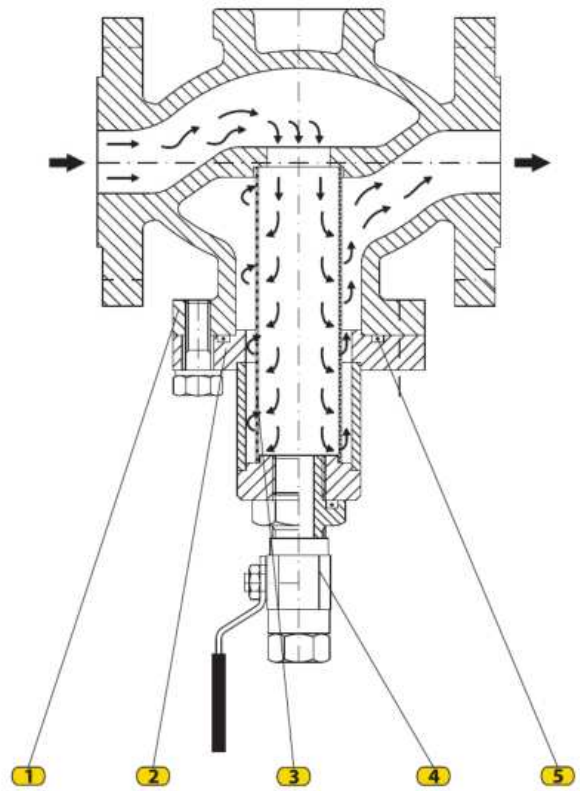

operation

Gas enters the filter body (1) and the inside of filter element (3). Contaminants are retained as the gas passes through the element, and the cleaned process medium exits the filter. The permitted flow direction, shown in the drawings, is marked on the filter

filter.

Installation

Gas filter type 413 is installed vertically on horizontal gas lines, with cover (2) facing down. To clean filter element (3), remove cover (2), which is bolted to the body. An O-ring between filter body (1) and cover (2) ensures tightness. Ball valve (4) on the cover drains condensate when opened. Maintenance consists of visually checking element (3); clean and blow it out when required.

Dirt trap type 413 complies with:

SRPS EN 558-1 – face-to-face dimensions;

SRPS EN 1092-1 – connection dimensions.

The manufacturer reserves the right to modify the technical data presented in this catalog as the equipment production process is improved.

SERIES 410

GAS FILTERS

GAS FILTER WITH PERMANENT CARTRIDGE



Type: 413-V

parameters

Sizes: DN25–DN200, PN16/25, ANSI150

Climate version: U and KhL (to -60 °C)

application

NATURAL GAS, PROPANE-BUTANE,

air, nitrogen and industrial gases

purpose

Gas filter type 413-V is used at distribution and metering/distribution stations and other installations to protect sensitive devices from contaminants carried by the process gas. The body contains a durable mesh element whose cell density provides the required

filtration level.

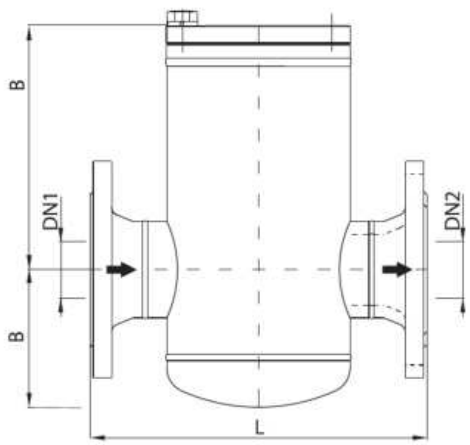

dimensions

SIZE \ DN1/DN2		25	25	32	32 25	40	40 32 25	50	50 40 32	65	65 50 40	80	80 65 50	100	100 80 65	150	150 100 80	200	200 150 100	250	250 200 150
L	(mm)	160		180		200		230		290		310		350		450		600		730	
A		105		130		145		160		200		225		280		365		470		550	
B		50		70		75		85		130		130		150		180		280		340	

materials

item	description	material
1.	Filter body	Steel 1212
2.	cover	Steel 0361
3.	Filter element	Stainless steel (mesh)
4.	Sealing ring	NBR80

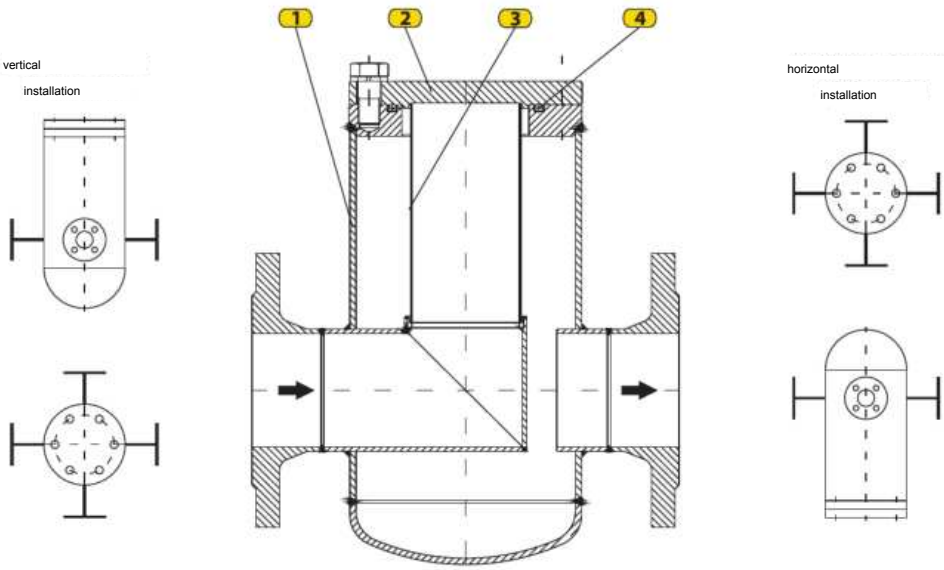

operation

Gas enters the filter body (1) and the inside of filter element (3). Contaminants are retained as the gas passes through the element, and the cleaned process medium exits the filter. The permitted flow direction, shown in the drawings, is marked on the filter

filter.

INSTALLATION

Gas filter type 413-V may be installed horizontally or vertically. Straight, angular and reduced versions are available as shown; specify the version when ordering. To clean element (3), remove bolted cover (2). An O-ring between body (1) and cover (2) ensures tightness. Ball valve (4) on the cover drains condensate. Visually inspect element (3); clean and blow it out as required.

Gas filter type 413-V complies with SRPS EN 13445. The manufacturer reserves the right to change the catalogue technical data when improving the equipment design or production.

SERIES
410

GAS FILTERS

FINE GAS FILTERS

WITH REPLACEABLE FILTER ELEMENT



Type: 414/1



Quick-opening mechanism





Type: 414/2

parameters

Sizes:

DN25 ÷ DN250 PN16/25, ANSI150 - type 414/1

DN25–DN300 PN16–100, ANSI150–600 - type 414/2

application

NATURAL GAS, PROPANE-BUTANE,

AIR, NITROGEN, TECH. GASES

purpose

Fine gas filters remove solids to protect control, safety and metering devices. Standard felt removes 98% of particles >5 µm. Type 414/1 has one element; 414/2 has two for high-capacity stations. The body has inlet/outlet flanges, felt element, blind cover, bottom condensate/depressurization valve and G1/4" gauge ports. DN200 units have cover handling and 800 mm legs; specify another height. Axial, vertical and left inlet are standard; order angular or other mounting.

materials

item	description	material	item	description	material
1.	Filter body	Steel 1212	5. |	Filter element	Reinforced perforated sheet synthetic felt
2;3. |	Blind flange	Steel 0361	6;7. |	Flanges	Steel 1330
4. |	O-ring	NBR80	8. |	Opening mechanism	steel

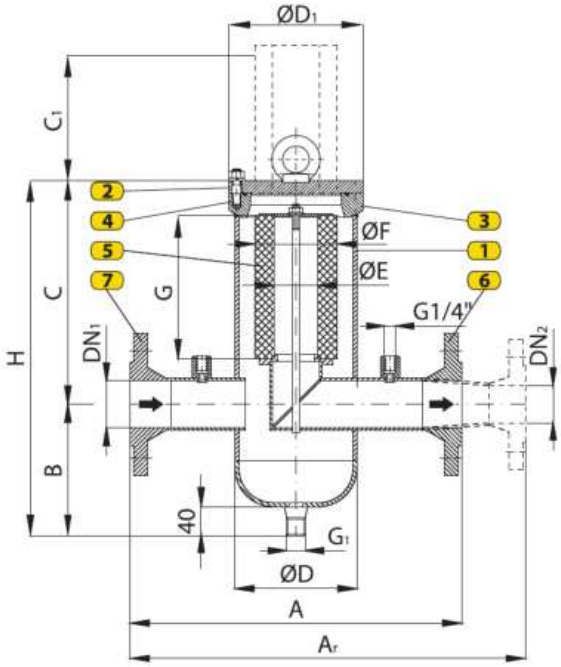

Angular filter
variant A

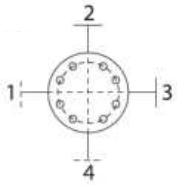

Angular filter
Variant B

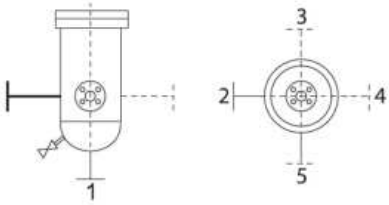

When ordering an angular filter
specify A/B and inlet/outlet.
Example: angular filter type 414/1 A-2-3.

dimensions

TYPE: 414/1

DN1	фильтр. элемент		DN2	A	Ar	B	C	C1	H	ØD	ØE	ØF	G	ØD1	G1	масса
	тип	кол-во		(mm)												кг
25	G0.5		-	290	-	125	195	108	320	114.3	35	80	120	130	1/2"	20
40	G0.5		32(25)	300	360	125	195	108	320	114.3	35	80	120	130	1/2"	25
50	G1		40(32)	380	450	155	265	150	420	139.7	50	95	165	150	1/2"	35
65	G1.5		50(40)	400	490	185	310	195	495	168.3	69	120	210	180	3/4"	45
80	G1.5	1	65(50)	400	490	190	325	195	515	168.3	69	120	210	180	3/4"	50
100	G2		80(65)	500	600	220	390	255	610	219.1	86	165	270	230	3/4"	90
125	G2.5		100(80)	700	800	280	460	260	740	273.1	110	200	283	300	3/4"	210
150	G2.5		125(100)	700	800	280	460	260	740	273.1	110	200	283	300	3/4"	220
200	G3		150	900	1000	310	525	290	835	355.6	138	252	320	375	3/4"	300

NOTE

Type 414/1 filters can be supplied on request with reduced outlet nozzle DN2,

smaller than inlet nozzle DN1, and a larger face-to-face dimension A2. For DN150 and above, a piston-and-segment closure can replace the blind flange for rapid element removal (item 8 on type 414/2). A differential-pressure indicator is recommended: 0–350 mbar for type 414/1; 0–700 (or 1000) mbar for type 414/2. For horizontal or inclined installation, specify the mounting position so the drain nozzle can be located correctly.

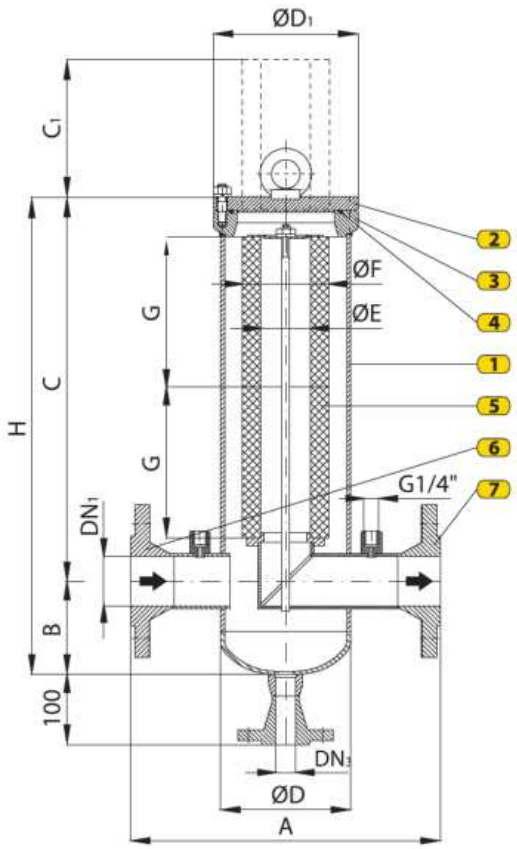

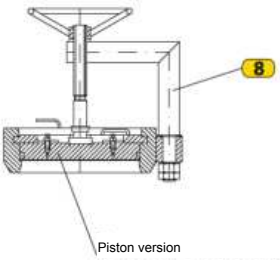

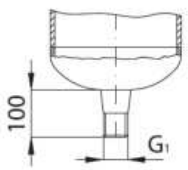

Option on
customer request

dimensions

TYPE: 414/2

DN1	фильтр. элемент		A	B	C	C1	H	ØD	ØE	ØF	G	ØD1	DN3	G1	масса
	тип	кол-во	(mm)												кг
50	G1	2	400	160	440	150	600	139.7	35	80	165	150	20(25)	1/2"	45
65	G1.5		450	180	570	190	750	168.3	69	120	210	180	20(25)	3/4"	60
80	G1.5		450	180	570	190	750	168.3	69	120	210	180	20(25)	3/4"	80
100	G2		550	210	680	250	890	219.1	86	165	270	230	25	3/4"	115
150	G2.5		700	260	740	260	1000	273.1	110	200	283	300	25	3/4"	300
200	G3		900	320	850	290	1170	355.6	138	252	320	375	25	3/4"	430
250	G4		1000	390	1070	390	1560	406.5	186	299	415	430	25	1"	520
300	G5		1200	440	1200	440	1640	508	246	390	470	530	25	1"	650

NOTE

On type 414/2 filters, condensate drain nozzles are flanged as standard or threaded on customer request, as shown.

The cover support and tightening mechanism (item 8) is fitted to filters DN200 and larger.

For type 414/2 filters DN200 and above, a piston-and-segment version for rapid filter-element removal and replacement (item 8) is available on request.

Fine gas filter – type 414/1 with one filter element

DN25

p_m (bar)	Δp (mbar)						
	10	25	50	75	100	150	250
0.5	30	45	65				
1	40	65	85	85			
2	50	75	105	130	130		
5	80	130	185	230	260	260	
10	120	195	275	340	390	480	480
16	150	235	330	400	465	570	740

DN100

p_m (bar)	Δp (mbar)						
	10	25	50	75	100	150	250
0.5	620	980	1380	1690			
1	710	1120	1590	1950	2250		
2	870	1380	1950	2390	2760	3380	
5	1230	1950	2760	3380	3900	4780	6170
10	1670	2640	3740	4580	5280	6470	8350
16	2080	3280	4640	5690	6570	8040	10400

DN40

(bar	Δp (mbar)						
	10	25	50	75	100	150	250
0.5	80	125	180				
1	110	170	235	235			
2	130	210	290	355	335		
5	230	360	500	610	710	710	
10	335	530	750	920	1060	1300	1300
16	400	640	900	1100	1270	1560	2000

DN125

(bar	Δp (mbar)						
	10	25	50	75	100	150	250
0.5	1170	1810	2610	3020			
1	1350	2130	3020	3690	4260		
2	1650	2610	3690	4520	5220	6390	
5	2350	3690	5220	6390	7380	9040	11650
10	3160	5010	7070	8650	9900	12240	15790
16	3920	6200	8780	10760	12420	15210	19620

DN50

p_m (bar)	Δp (mbar)						
	10	25	50	75	100	150	250
0.5	125	200	285				
1	170	270	380	380			
2	210	330	465	570	570		
5	360	570	800	990	1140	1140	
10	540	850	1200	1480	1700	2090	2090
16	640	1020	1440	1770	2040	2500	3220

DN150

(bar	Δp (mbar)						
	10	25	50	75	100	150	250
0.5	1300	2050	2900	3550			
1	1500	2370	3350	4100	4730		
2	1830	2900	4100	5020	5800	7100	
5	2590	4100	5800	7100	8200	10050	12950
10	3510	5550	7850	9610	11000	13600	17550
16	4360	6900	9760	11950	13800	16900	21800

DN65

(bar)	Δp (mbar)						
	10	25	50	75	100	150	250
0.5	210	340	480				
1	230	370	520	640			
2	300	480	680	830	960		
5	490	780	1100	1350	1560	1920	
10	700	1100	1570	1920	2220	2720	3510
16	780	1220	1720	2110	2430	2970	3840

DN200

(bar)	Δp (mbar)						
	10	25	50	75	100	150	250
0.5	2060	3260	4610	5650			
1	2380	3770	5320	6520	7530		
2	2920	4610	6520	7990	9220	11300	
5	4120	6520	9220	11300	13040	15970	20600
10	5580	8830	12490	15290	17660	21630	27900
16	6940	10980	15520	19000	21950	26900	34700

DN80

p_m (bar)	Δp (mbar)						
	10	25	50	75	100	150	250
0.5	300	470	660				
1	400	620	880	880			
2	480	760	1080	1320	1320		
5	830	1320	1870	2290	2640	2640	
10	1250	1980	2800	3430	3960	4850	4850
16	1500	2370	3350	4100	4740	5800	7500

Gas flow in m³/h at t=0 °C, p=1.01325 bar

Pm (bar) – inlet pressure

Δp (mbar) – filter pressure drop

Fine gas filter – type 414/2 with two filter elements

DN50

p_m (bar)	Δp (mbar)						
	25	50	75	100	150	250	500
0.5	280	280					
1	380	380					
2	570	570	570				
5	660	1020	1140	1140			
10	1040	1480	1810	2090	2090		
16	1320	1860	2280	2630	3220	3220	
25	1560	2210	2700	3120	3820	4930	4930
40			3100	3600	4500	6100	7800
50					4850	6800	9700
75						8100	14400

DN150

(bar	Δp (mbar)						
	25	50	75	100	150	250	500
0.5	2560	2560					
1	3400	3400					
2	3620	5120	5120				
5	5910	8370	10250	10250			
10	7670	9850	11000	15340	18790	18790	
16	9200	13000	15500	18400	21300	27000	
25	9900	14500	17500	21500	24300	31400	44400
40				27000	38300	49500	70000
50					47700	61600	87000
75						92000	130000

DN65

p (bar)	Δp (mbar)						
	25	50	75	100	150	250	500
0.5	340	480					
1	450	640	640				
2	550	780	960	960			
5	780	1110	1350	1560	1920		
10	1110	1570	1920	2220	2720	3510	
16	1720	2430	2980	3430	3500	5430	
25	1860	2630	3220	3710	4550	5870	8300
40				5900	6200	9300	13100
50					7200	11500	16300
75						17200	24300

DN200

p (bar)	Δp (mbar)						
	25	50	75	100	150	250	500
0.5	4430	4430					
1	4750	5910	5910				
2	5800	7240	8870	8870			
5	8860	12500	15350	19000	19000		
10	13270	17900	22500	26540	32500	32500	
16	15900	23000	29000	32600	38900	46000	
25	20000	29000	37000	43500	49000	60000	77000
40				54200	66400	84500	121000
50					82500	105000	150000
75						159000	225000

DN80

p (bar)	Δp (mbar)						
	25	50	75	100	150	250	500
0.5	660	660					
1	880	880	880				
2	930	1320	1320	1320			
5	1520	2160	2640	2640	2640		
10	2420	3420	4200	4850	4850	4850	
16	3050	4320	5300	6100	7500	7500	
25	3620	5120	6270	7240	8870	11450	11450
40				8100	10400	12800	18000
50					11000	15900	22500
75						20200	33500

DN250

p (bar)	Δp (mbar)						
	25	50	75	100	150	250	500
0.5	4710	6660					
1	6290	8890					
2	9430	13330	1330				
5	15400	21770	26670	31000			
10	24450	34570	42340	44000	48900		
16	30800	43600	53400	56000	70000	7560	
25	36500	51700	63300	72000	90000	110000	
40				90000	112000	140000	182000
50					125000	170000	226000
75						245000	338000

DN100

p_m (bar)	Δp (mbar)						
	25	50	75	100	150	250	500
0.5	810	1140					
1	880	1240	1240				
2	1140	1610	1970	2280			
5	1860	2630	3220	3720	4560		
10	2650	3740	4580	5300	6480	8360	
16	3630	5000	6000	7000	8400	11000	
25	4400	6200	7700	9000	10800	14000	19800
40				11500	17100	22000	31000
50					21200	27400	38800
75						41000	58000

DN300

(bar	Δp (mbar)						
	25	50	75	100	150	250	500
0.5	9570	9570					
1	12760	12760					
2	13530	19140	19140				
5	22100	31250	38300	38300			
10	35100	49600	60800	70200	70200		
16	44300	62600	76700	88600	108500	108500	
25	52500	74200	90800	105000	128000	166000	166000
40				117000	143000	185000	261000
50					178000	230000	325000
75						343000	485000

Gas flow in m³/h at t=0 °C, p=1.01325 bar

Pm (bar) – inlet pressure

Δp (mbar) – filter pressure drop

Filter with quick-opening mechanism

item	description	item	description
a	Filter body	c	Filter element Perf. sheet synthetic felt
Quick-opening mechanism		d	Differential-pressure indicator

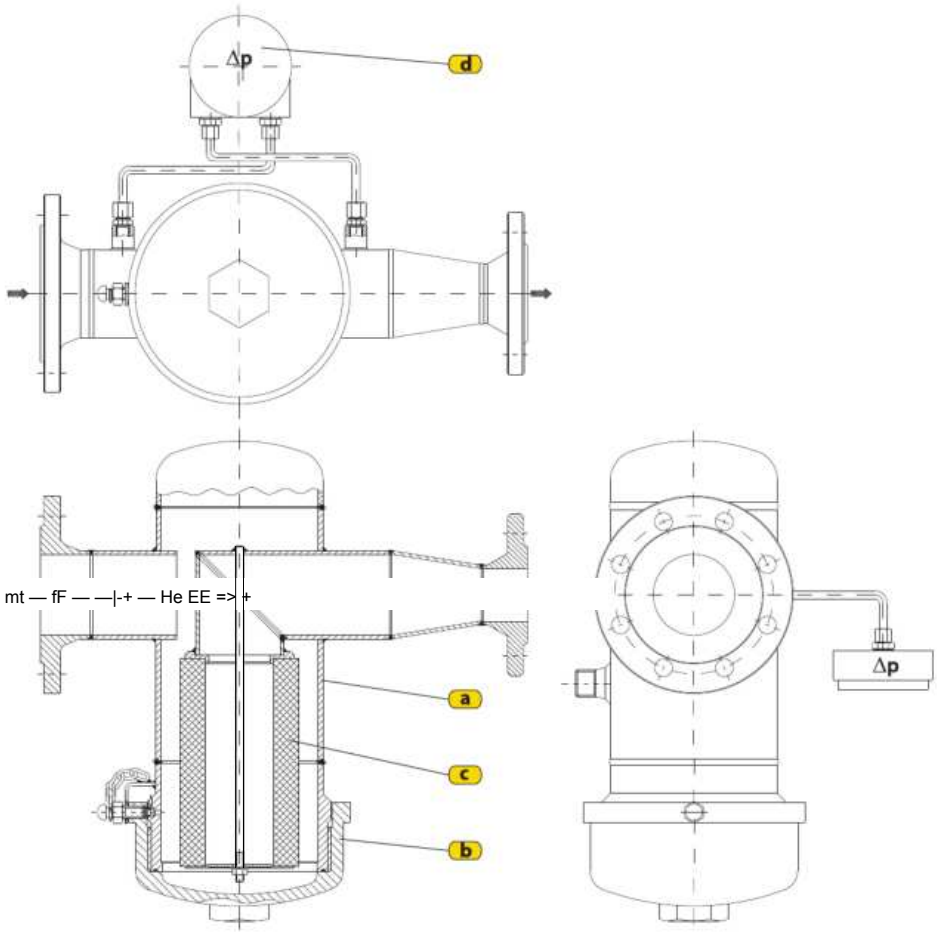

Quick-opening mechanism

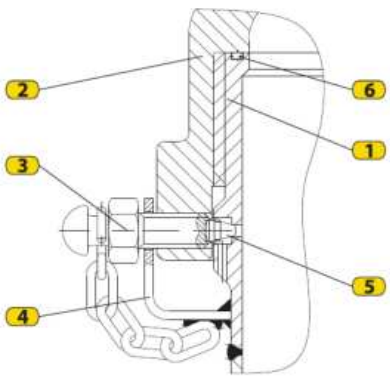

item	description
1	Gasket
2	cover
3	Safety bolt
4	Locking screw
5	Conical tip
6	Sealing ring

Connect the filter to the reduction-station piping with the drain valve at the lowest point. For startup, slowly open the upstream valve, then the downstream valve. Maintenance consists of periodically draining condensate and dirt and cleaning or replacing the filter element. A pressure drop of 300–400 mbar, read on the differential-pressure gauge, indicates a fouled element.

To clean or replace filter element (c), first close the upstream valve, then the downstream valve. Open the condensate drain to vent the filter to atmosphere; keep it open until the element is reinstalled. Slowly loosen safety bolt (3), remove it from locking screw (4), and turn cover (2) with gasket (1) to access the element. Unscrew the nut and remove the element cover, take out the element, and wipe the filter interior with a dry cloth.

Insert the clean or new filter element and tighten the nut. Clean the contact surfaces of the filter closure mechanism—gasket (1) and cover (2)—and check the conical tip and check that O-ring (6) is serviceable; if not, it must be replace it.

The O-ring groove and conical tip must be fully clean. Before assembly, lubricate the O-ring, mating surface and thread. Place cover (2) on gasket (1) and tighten, aligning the holes in cover (2) and locking screw (4), then insert the safety bolt into cover (2) to seal conical tip (5) in gasket (1). To recommission, first close the drain valve, then open the line valve. Finally, check the closure mechanism for leaks with soapy water.

Differential-pressure gauge operating instructions

Use the differential-pressure gauge only to check filter fouling (pressure drop).

To prevent one-sided pressure loading, opening and closing the differential-pressure gauge must follow this sequence:

Commissioning	Shutdown
1. Open valve 2	1. Open valve 2
2. Open valves 1 and 3	2. Close valves 1 and 3
3. Close valve 2	3. Close valve 2

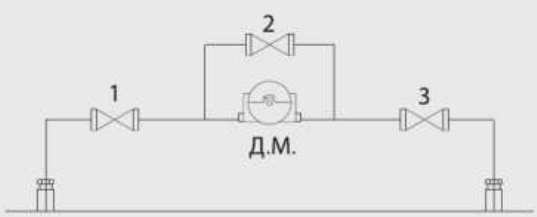

FLOW TABLE

The tables show maximum filter capacity Qmax (m³/h) at actual gas pressure and temperature and at the maximum permitted pressure drop Δpmax for dry gas. Flow at standard conditions (T=273.15 K, pa=1.01325 bar) is calculated using the formula:

$$Q_n = Q_{max} \cdot \frac{273.15}{T_s} \cdot \frac{p_s}{1.01325} \cdot \frac{1}{Z}$$

Qn (m³/h) – gas flow at standard conditions;
Qmax (m³/h) – gas flow at actual conditions;
Z – gas compressibility factor (Z=1 up to 20 bar);
Ts (K) – gas temperature;
ps (bar) – absolute gas pressure.

Recommended flow velocity at the filter connection flanges: ≤25 m/s.

Type: 414/1

DN	filter element		Qmax
	Type	QTY.	m³/h
25	G0.5	1	46
40	G0.5		125
50	G1		200
65	G1.5		335
80	G1.5		460
100	G2		800
125	G2.5		1300
150	G2.5		1800
200	G3		2400

Type: 414/2

DN	filter element		Qmax
	Type	QTY.	m³/h
50	G1	2	200
65	G1.5		335
80	G1.5		460
100	G2		800
150	G2.5		1800
200	G3		3000
250	G4		4670
300	G5		6700

FILTER SELECTION

Select the filter that best meets the required gas flow at minimum inlet pressure and permissible filter pressure drop. If the required flow lies between the capacities of two filters, select the larger filter.

Example 1		Example 2	
gas flow rate	1200 m³/h	gas flow rate	15000 m³/h
Min. inlet pressure	5 bar	Min. inlet pressure 16 bar	
Pressure drop	75 mbar	Pressure drop	100 mbar
DN50	Q=990 m³/h	DN50	Q=7000 m³/h
DN65	Q=1350 m³/h	DN65	Q=18400 m³/h
FILTER SELECTION	type: 414/1 DN65	FILTER SELECTION	type: 414/2 DN150

If filter selection is difficult, contact the manufacturer.

MAINTENANCE

A differential pressure of 250–300 mbar for type 414/1 or 400–500 mbar for type 414/2 indicates a fouled filter element. Filter maintenance consists of periodic draining through the outlet valves and monitoring element fouling on the differential-pressure indicator

or by inspecting the element itself. Clean and blow it out as required
or replace it with a new one.

Filters type 414/1 and type 414/2 comply with SRPS EN 13445.

The manufacturer reserves the right to change the technical data in this catalogue when improving the equipment design or production.

B

SERIES 410

GAS FILTERS

GAS CONDENSATE SEPARATOR

application

NATURAL GAS, TANK GAS,

BIOGAS, ETC.

Type: 418



purpose

The water and heavy-hydrocarbon separator is a device used to separate water and

C5 and C6 hydrocarbons from tank gas. It is installed downstream of a heat exchanger that lowers gas temperature, enabling efficient separation of water and heavy hydrocarbons. The separator uses perforated plates. A liquid-level indicator and microswitches activate automatic condensate discharge through a valve with a pneumatic

actuator.

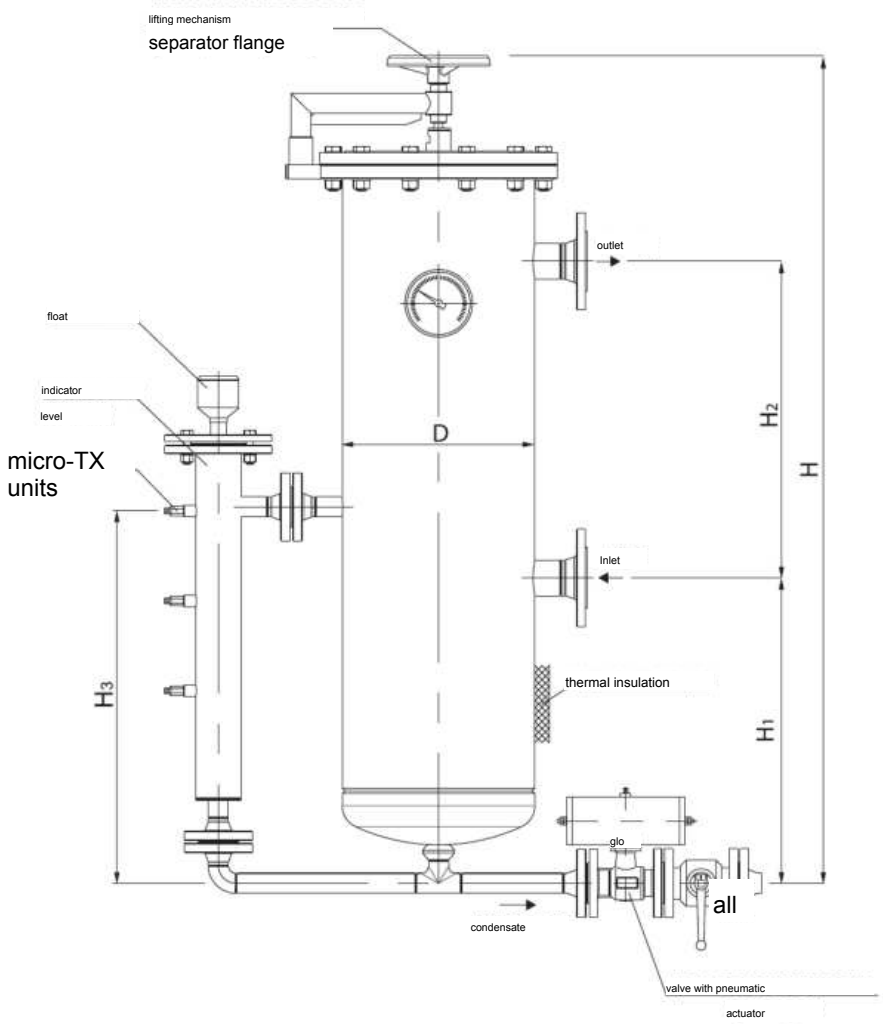

dimensions

Type	Connection for gas (inlet) (DN)	Conn. | Conn. for gas (outlet) (DN)	for water (condensate) (DN)	H (mm)	H1 (mm)	H2 (mm)	H3 (mm)	D (mm)	Q (m3/h)
418	50	50	25	1394	516	535	636	323,9	500

Condensate separator type 418 complies with SRPS EN 13445. The manufacturer reserves the right to modify the technical data in this brochure when improving equipment manufacture.

SERIES
420

GAS HEATERS AND VAPORIZERS FOR

LIQUEFIED PETROLEUM GAS (LPG)

GAS HEATER



Type: 421-V

application

natural gas

Type: 421-H



purpose

Gas heaters prevent icing during gas expansion and large pressure drops. Icing endangers regulating and safety equipment, so gas is preheated upstream. Types 421-V and 421-H are mainly for main metering/distribution stations. Gas side: ANSI300 standard; ANSI400, ANSI600, PN63 or PN100 on request. A safety valve on DN25 protects the heating side. Install shut-off valve type 236 or 236-K to prevent gas entering the heating system if perforated. Standard medium: 90/70 °C hot water; hotter water or

steam.

Gas heaters are normally manufactured with rated outputs from 12 to 1320 kW. Higher-power and larger units can be produced on request.

Gas heater selection

The following data are required to select a gas heater:

Qn (m³/h) - gas flow at normal conditions (0 °C, 1,01325 bar)
pu (bar) - gas pressure at heater inlet
p_r (бар) - gas pressure after reduction
t_u (°C) - gas temperature at heater inlet
t_r (°C) - gas temperature after reduction

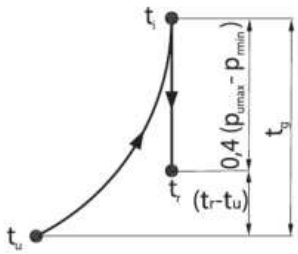

chart
temperature difference

Determining the temperature difference

Atg= ti - tu = 0,4(pu max - pr min)+(tr - tu) (°C)

tin (°C) - gas temperature at heater outlet
Pumax (bar) - max. gas pressure at heater inlet
Prmin (bar) - min. gas pressure after reduction
0,4(°C/bar) - Joule-Thomson coefficient

Heating capacity

P= QnpnCnAtg (kW)

p"=0,8 (kg/m³), gas density at normal conditions
Cn(kJ/kgK) specific heat of natural gas at mean temperature and pressure

Example:
Qn = 25000 m³/h
p. = 30-50 bar
p = 6 bar
$t_u = 5$ °C
$t_r = 10$ °C

$t_g = 0,4\ (51-7)+(10+5) = 2\ 2\ ,6$ °C

P = 25000/3600-0.8-2.0828-22.6 = 261.5 kW

Selected gas heater: 421-V-300-2/18

Gas heaters types 421-V and 421-H comply with SRPS EN 13445. The manufacturer reserves the right to modify the technical data in this brochure when improving equipment manufacture.

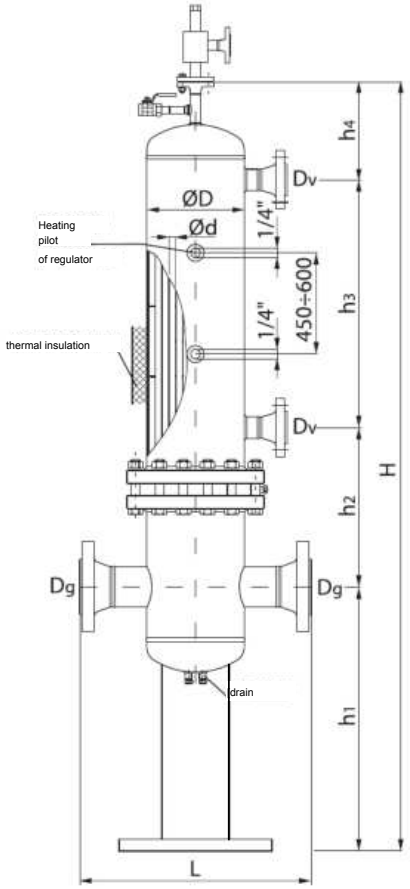

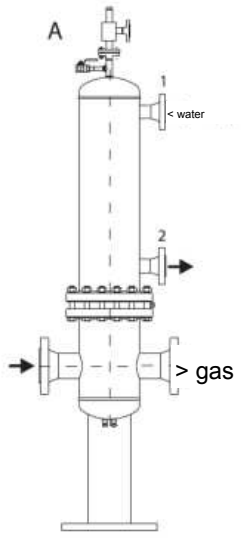

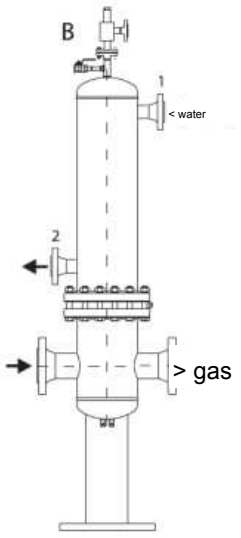

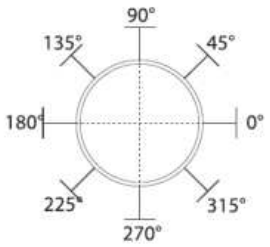

Example:

A) connection 1 - 0 °
connection 2 - 0 °

B) connection 1 - 0 °
connection 2 - 180 °

TYPE: 421-V

Tip	Dg (DN)	Dv (DN)	Подключение дренажа	Подключение для предохр. клапана	Подключение для пилота регулятора	h1 (mm)	h2 (mm)	h3 (mm)	h4 (mm)	H (mm)	L (mm)	ØD (mm)	F (m²)	P (kW)
421-V-100-1/14	25, 40	25	1/2"	1/2"	1/4"	800	310	685	170	1965	300	114,3	0,481	12
421-V-100-2/14								885		2165			0,604	20
421-V-125-1/14	40, 50	25 32	1/2"	1/2"	1/4"	800	320	635	200	1955	400	139,7	0,854	28
421-V-125-2/14								855		2175			1,105	40
421-V-150-1/14	50, 65, 80	32 40	1/2"	1/2"	1/4"	800	360	805	210	2175	450	168,3	1,445	50
421-V-150-2/14								1005		2375			1,832	75
421-V-200-1/14	80, 100	40 50	1/2"	3/4"	1/4"	800	410	610	240	2040	550	219,1	2,536	90
421-V-200-2/14								730		2160			2,937	130
421-V-250-1/18	80, 100, 150	50 65	1/2"	3/4"	1/4"	800	480	865	250	2395	650	273,0	4,520	160
421-V-250-2/18								935		2545			5,156	220
421-V-300-1/18	100, 150	65 80	1/2"	3/4"	1/4"	800	550	750	280	2380	700	323,9	6,689	250
421-V-300-2/18								830		2460			7,241	300
421-V-350-1/18	100, 150	80 100	1/2"	3/4"	1/4"	800	580	790	300	2470	750	355,6	8,813	380
421-V-350-2/18								970		2650			10,34	520
421-V-400-1/18	150, 200, 250	100 125 150	1/2"	1"	1/4"	800	620	910	320	2650	850	406,4	12,99	600
421-V-400-2/18								1100		2840			15,15	760
421-V-450-1/18	200, 250	125 100	1/2"	1"	1/4"	800	680	790	360	2630	950	457,2	17,16	900
421-V-450-2/18								920		2760			18,05	1000
421-V-500-1/18	250, 300	150 200	1/2"	1"	1/4"	800	720	800	390	2710	1000	508,0	23,84	1200
421-V-500-2/18								950		2860			24,49	1320

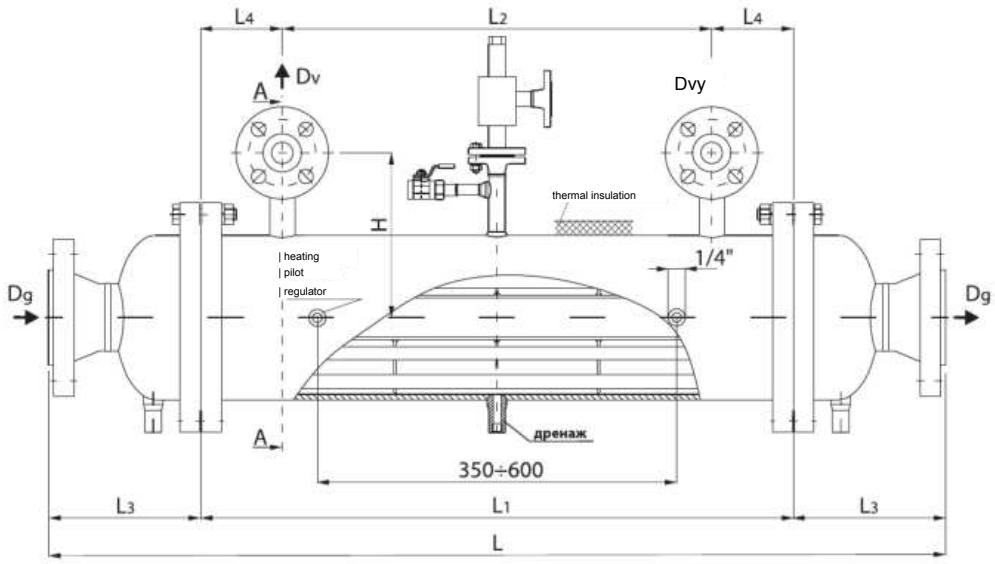

Examples of water inlet and outlet locations:

Section “A”

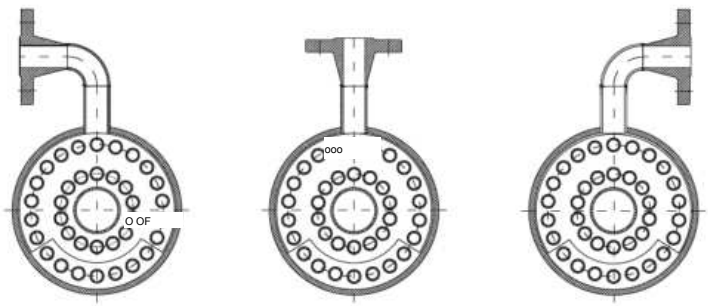

Variant A Variant B Variant C

TYPE: 421-H

Tip	Dg (DN)	Dv (DN)	Подключение дренажа	Подключение для предохр. клапана	Подключение для патрона регулятора	L (mm)	L1 (mm)	L2 (mm)	L3 (mm)	L4 (mm)	H (mm)	D (mm)	F (m)	P (kW)
421-H-100-14	25	20	1/2"	1/4"	1/4"	1000	650	470	175	90	170	114,3	0,481	20
421-H-150-14	40, 50	32	1/2"	1/4"	1/4"	1100	665	475	220	95	215	168,3	1,193	40
421-H-150-18	40, 50, 65	32 40	1/2"	1/4"	1/4"	1200	765	575	220	95	215	168,3	1,543	70
421-H-200-18	50, 65, 80	32 40	1/2"	1/4"	1/4"	1450	990	750	230	120	250	219,1	2,614	120
421-H-250-18	80, 100	50 65	1/2"	1/4"	1/4"	1550	1010	760	270	130	270	273,0	3,965	170
421-H-300-18	100, 150	65 80	1/2"	1/4"	1/4"	1600	975	650	310	160	300	323,9	5,282	280
421-H-350-18	100, 150	65 100	1/2"	1/4"	1/4"	1700	1040	680	330	180	360	355,6	7,714	400
421-H-400-18	150, 200	100 125	1/2"	1/4"	1/4"	2000	1245	885	375	190	400	406,4	10,412	560

SERIES
420

HEAT EXCHANGERS AND VAPORIZERS FOR

LIQUEFIED PETROLEUM GAS

ELECTRIC HEAT EXCHANGER FOR CNG



Type: 421-E

Ex ZONE

SAFE AREA



Рис. 1. Теплообменник электический тип: 421/E

Рис. 2. Распределительный щит

parameters

Capacities: 200,300,400,500,600 m³/h (higher on request)

Pressure class: PN250

application

Compressed natural gas

CNG

PURPOSE

Electric heat exchanger type 421/E heats gas to prevent icing during high-pressure expansion. Icing is especially hazardous to regulators and safety equipment, making gas preheating necessary. The gas heat exchanger is normally rated PN250. The heated gas is prepared for compression to operating pressure and delivery to the consumer's pipeline. Gas is heated by electric heaters compliant with Ex requirements; the heat-transfer medium is generally water with antifreeze added.

Item	description
1.	Heating vessel
2.	Electric heater
3.	Expansion tank
4.	Pressure gauge 0-250
5.	Safety valve
6.	Temperature sensor
7.	Thermometer
8.	1/2" NPT connection

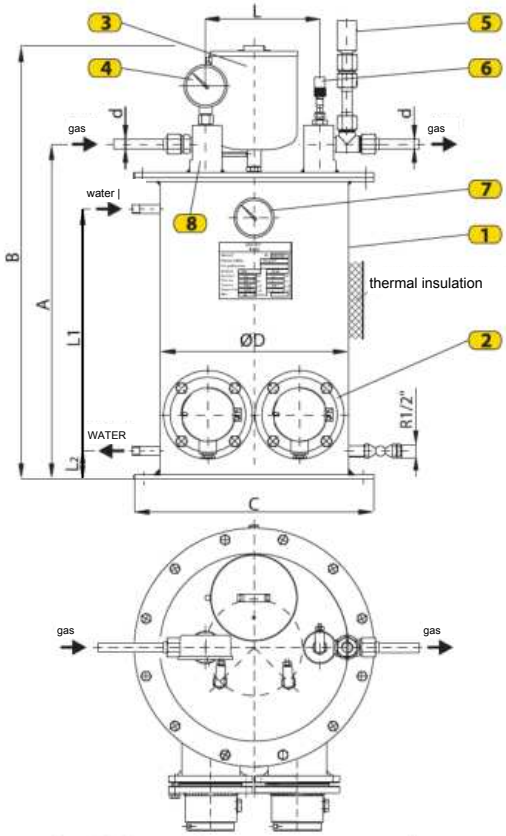

Fig. 3. Electric heat exchanger

type: 421/E Q = 200 m3/h

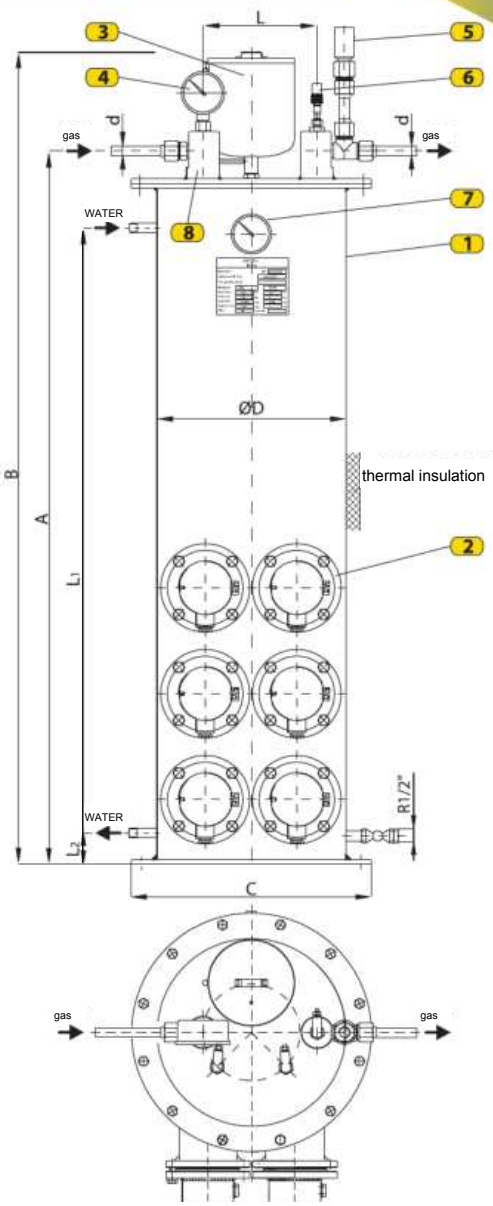

Fig. 4. Electric HX

type: 421/E Q = 600 m3/h

Мощность (m3/h)	A	B	C	D	L	L1	L2	d	соединение для воды R	клапан предохран. тип: 215	объем. теплонос. (литр)	Електр. нагрев. n x kW
	(mm)											
100	500	767	350	300	212	340	55	12	3/8"	1/2" PN250	40	1 x 4,5
200	620	804	445	350	212	440	65	12	3/8"	1/2" PN250	47	2 x 4,5
300	850	1034	445	350	212	670	65	18	3/8"	1/2" PN250	65	3 x 4,5
400	1000	1285	445	350	212	820	65	18	3/8"	1/2" PN250	78	4 x 4,5
500	1045	1515	445	350	212	1045	65	25	3/8"	1/2" PN250	95	5 x 4,5
600	1400	1685	445	350	212	1215	65	25	3/8"	1/2" PN250	115	6 x 4,5

The manufacturer reserves the right to modify the technical data presented in this catalog as the equipment production process is improved.

SERIES
420

HEAT EXCHANGERS AND VAPORIZERS FOR

LIQUEFIED PETROLEUM GAS

HEAT EXCHANGER FOR CNG

HEAT-TRANSFER MEDIUM - HOT WATER

Type: 421/TV



Ex ZONE

SAFE AREA





Рис. 1. Теплообменник (теплоноситель - горячая вода)

Рис. 2. Распределительный щит

parameters

Capacities:

200,300,400,500,600,800,1 000,1 500 m³/h (higher on request)

Pressure class: PN250

application

Compressed natural gas

CNG

PURPOSE

Heat exchanger type 421/TV heats gas to prevent icing during high-pressure expansion. Icing is especially hazardous to regulators and safety equipment, making gas preheating necessary. The gas heat exchanger is normally rated PN250. The heated gas is prepared for compression to operating pressure and delivery to the consumer's pipeline. Gas is heated with hot water in a 90/70 °C system (water vaporizer) or with low-pressure steam at 0,5 bar (steam vaporizer).

item	description
1.	Heating vessel
2.	Pressure gauge 0-250
3.	1/2" NPT connection
4.	Safety valve for water
5.	Safety valve
6.	Temperature sensor
7.	Thermometer
8.	Radiator valve 1/2"

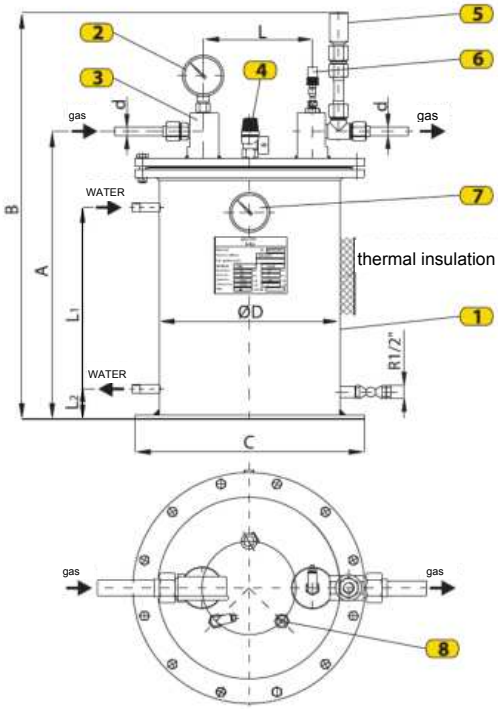

Fig. 6. Type: 421/TV Q = 300 m3/h

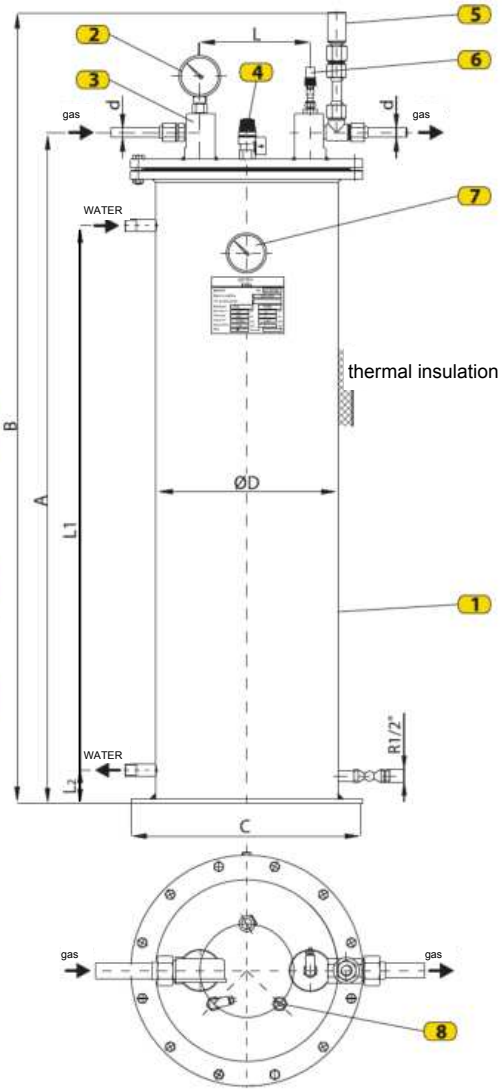

Fig. 7. type: 421/TV Q = 1250m3/h

Мощность (m3/h)	A	B	C	D	L	L1	L2	d	соединение для воды R	объем. тепло-носителя (литр)	клапан предохран. тип: 215	Потребление (kW)
	(mm)											
200	510	740	455	350	212	310	65	12	3/4"	34,5	R1/2" PN250	8,8
300	560	790	455	350	212	360	65	18	3/4"	38	R1/2" PN250	13,2
400	710	940	455	350	212	510	65	18	3/4"	51	R1/2" PN250	17,6
500	800	1124	455	350	212	600	65	25	3/4"	56	R1/2" PN250	22
600	924	1155	455	350	212	721	65	25	3/4"	69	R1/2" PN250	26,4
800	905	1230	455	350	212	840	65	25	3/4"	68	R1/2" PN250	35,2
1000	1290	1622	455	350	212	900	65	25	3/4"	72	R1/2" PN250	44
1250	1100	1424	455	350	212	1075	70	30	1"	83	R1/2" PN250	55

The manufacturer reserves the right to modify the technical data presented in this catalog as the equipment production process is improved.

SERIES
420

HEAT EXCHANGERS AND VAPORIZERS FOR

LIQUEFIED PETROLEUM GAS

ELECTRIC VAPORIZER

423/E



Ex ZONE

SAFE AREA





Рис. 1. Испаритель электический тип: 423/E

Рис. 2. Распределительный щит

parameters

Capacities:

30(25),60,100,135,165,200,250,300 kg/h (more on request)

Pressure class: PN25

application

PROPANE-BUTANE (LPG)

PURPOSE

Electric vaporizer type 423/E is used for forced vaporization and reheating of liquefied petroleum gas (LPG), a propane-butane mixture. Liquid LPG enters at an average temperature of 10°C (depending on ambient temperature) and vaporizes at 30-40°C. The heated gas is then ready for compression to operating pressure and delivery through the consumer pipeline. Ex-compliant electric heaters (part 13) provide heat; the heat-transfer medium is mainly water with antifreeze reducing its freezing point to -30°C.

DISTRIBUTION PANEL (PS II)

Each vaporizer includes a distribution panel (Fig. 2) for control and monitoring, installed outside the hazardous area. Instrument and power cables run underground; panel connections comply with Ex requirements. The sheet-metal enclosure is IP55 and wall-mounted. Control and switching devices are on DIN rails, indicators and switches on the door; cables enter from below through glands. A matching wiring diagram is supplied (Fig. 8).

EVAPORATOR CONTROL

Temperature controls operation. Three PT100 sensors measure the heat-transfer medium—duty and standby/safety (part 12)—and gas (part 10). An Ex ia IIC/IIB T4 relay controller drives heaters (part 13) and solenoid valve (part 8). Ex d IIA T3 heaters heat the medium. The Ex m II T4 valve closes the liquid-gas inlet at low temperature or power loss. An impurity trap (part 9) is upstream. Medium: 60-90°C; gas measured by sensor (part 10) must reach 25°C. Settings: qualified personnel only.

VAPORIZER START-UP AND OPERATION

Before starting the vaporizer, check the following:

- water level in the heating boiler (and on the expansion-tank level indicator)

must not be below minimum)

- inlet (TF) and outlet (GF) valves are open

Turn the “Vaporizer ON” switch to position 1. Automatic solenoid-valve control then starts by turning the “EMV ON” switch to position 1. After reaching operating temperature (10-15 min), the vaporizer enters automatic mode.

When ordering, specify:

- VAPORIZER TYPE
- CAPACITY IN KG,
- liquid-gas inlet direction (left or right).

The manufacturer reserves the right to modify the technical data presented in this catalog as the equipment production process is improved.

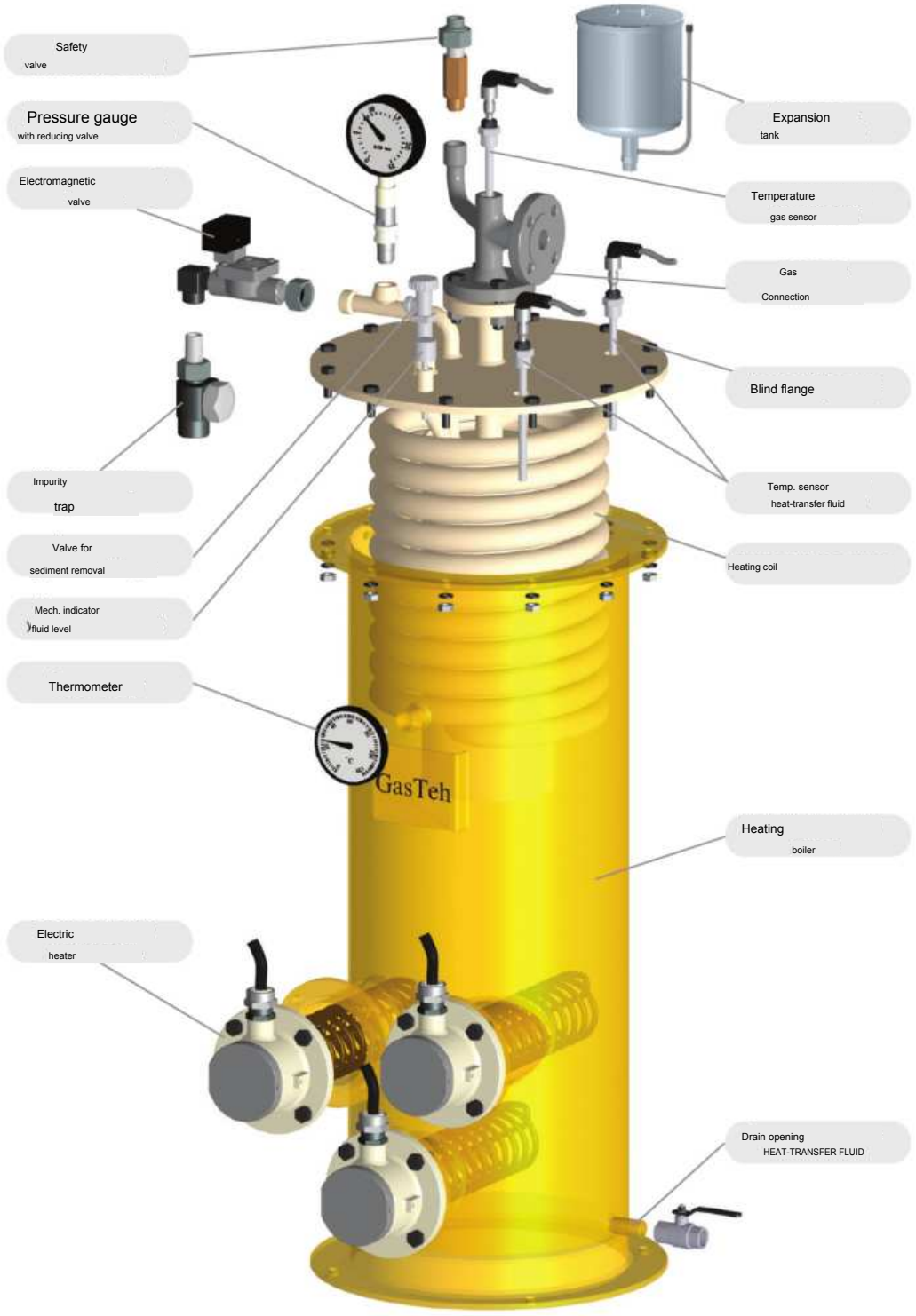

Рис. 3. Испаритель электрический тип: 423/E

operating principle

The vaporizer comprises three main units (PS):
- gas boiler (PS I)
- heat-transfer-fluid boiler (PS II)
- distribution panel (PS III)

GAS BOILER (PS I)

The gas boiler is an integral unit comprising, besides blind flange (part 1) with heating coil (part 2) and settling tank for liquid gas (part 3), and connections for liquid inlet and gas outlet; it also includes safety devices: gas temperature sensor (part 10) and solenoid valve connected to the distribution panel (PS III). Also installed: sediment drain valve (part 4), safety valve (part 5) and pressure gauge with reducing valve (part 6), mechanical heat-transfer-fluid level indicators (part 7), and an expansion tank for determining heat-transfer-fluid level (part 16) Installed before the solenoid valve is an impurity trap (part 9).

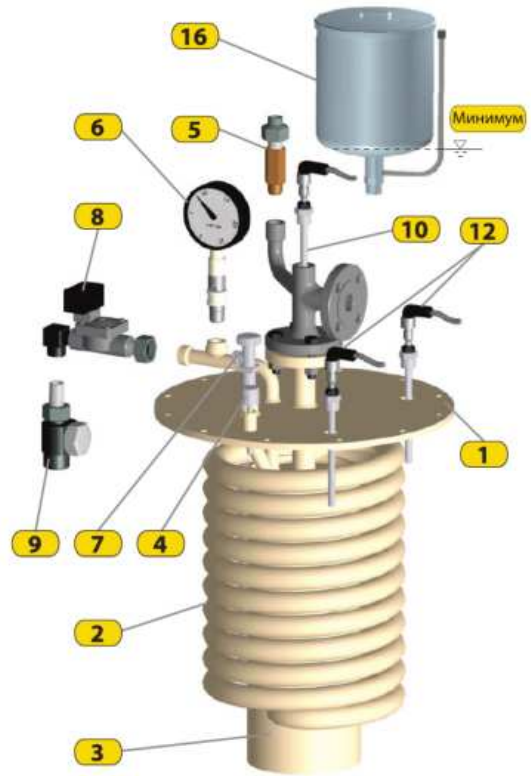

Рис.4. Газовый котел (PS I)

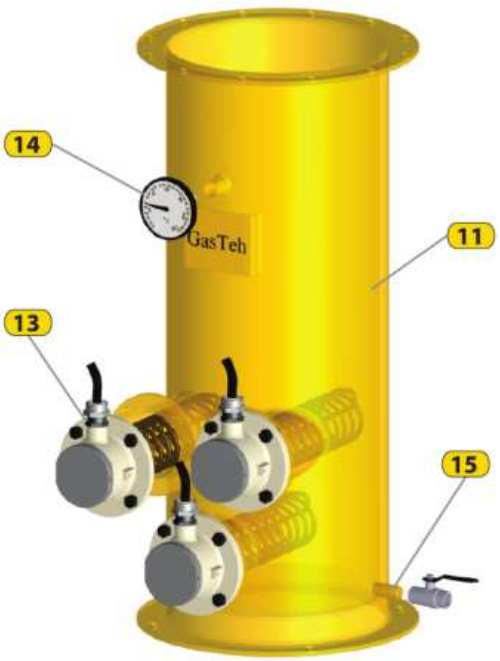

Рис. 5. Котел теплоносителя (PS II)

HEAT-TRANSFER-FLUID BOILER (PS II)

The gas boiler is an integral unit comprising, besides blind flange (part 1) with heating coil (part 2) and settling tank for liquid gas (part 3), and connections for liquid inlet and gas outlet; it also includes safety devices: gas temperature sensor (part 10) and solenoid valve connected to the distribution panel (PS III). Also installed: sediment drain valve (part 4), safety valve (part 5) and pressure gauge with reducing valve (part 6), mechanical heat-transfer-fluid level indicators (part 7), and an expansion tank for for determining heat-transfer-fluid level (part 16). Installed before the solenoid valve is an impurity trap (part 9).

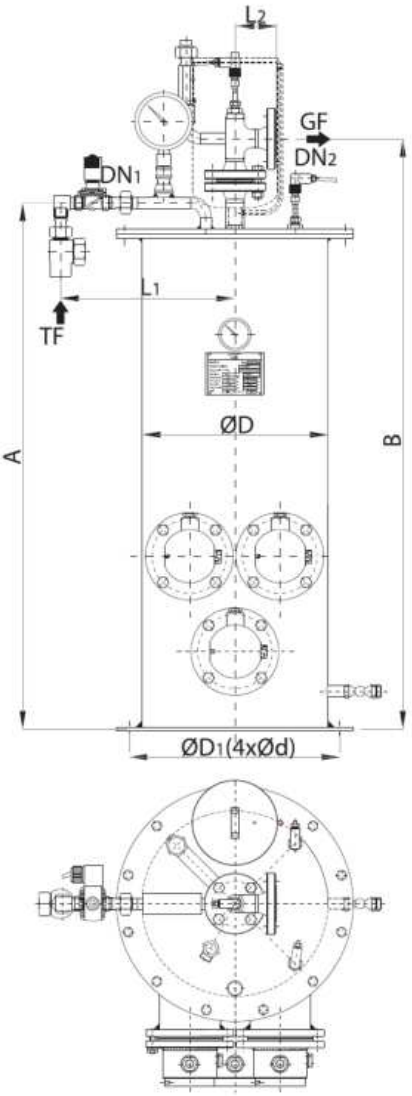

Fig. 6. Electric vaporizer type: 423/E
25-200 kg/h

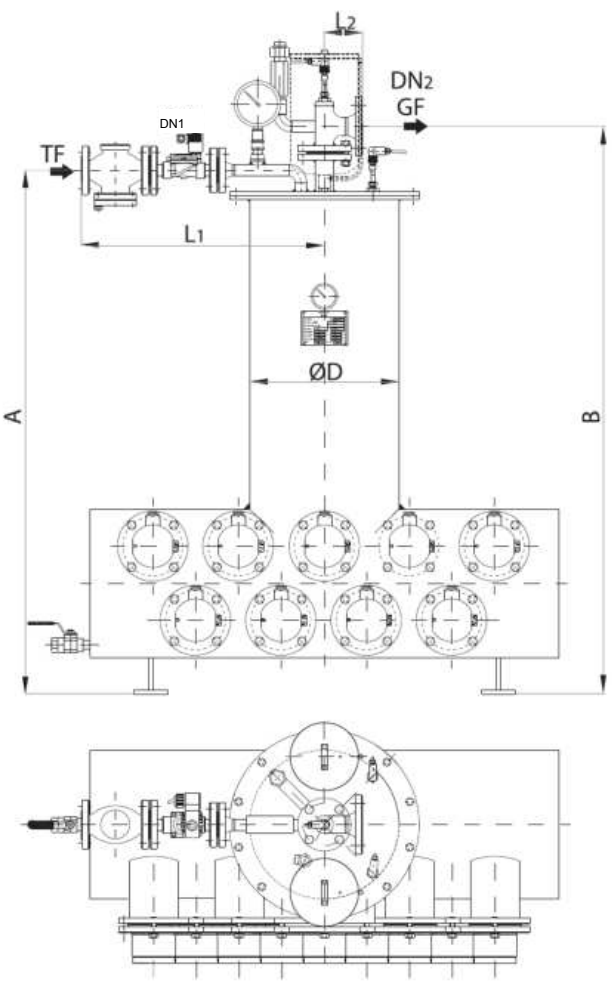

Fig. 7. Electric vaporizer type: 423/E
250-300 kg/h

Мощность (кг/ч)	A	B	D	D1	d	L1	L2	объем. тепло-носителя (литры)	Соединения		Предохр. клапан тип: 215	Елект. нагрев. n x kW
	(mm)								TF(DN1)	GF(DN2)		
30(25)	600	695	300	350	10	215	110	32	R1/2"	R1"	G1/2"	1 x 4,5
60	720	840	350	400	14	350	80	48	R1/2"	DN25	G1/2"	2 x 4,5
100	1000	1120	350	400	14	350	80	70	R1/2"	DN25	G3/4"	3 x 4,5
135	1160	1280	350	400	14	350	80	83	R1/2"	DN25	G3/4"	4 x 4,5
165	1440	1560	350	400	14	380	80	100	R3/4"	DN25	G3/4"	5 x 4,5
200	1760	1860	350	400	14	380	90	117	R3/4"	DN32	G3/4"	6 x 4,5
250	1685	1785	350	/	/	570	90	168	DN25/20	DN32	G3/4"	7 x 4,5
300	1880	1970	350	/	/	570	90	188	DN25/20	DN32	G3/4"	9 x 4,5

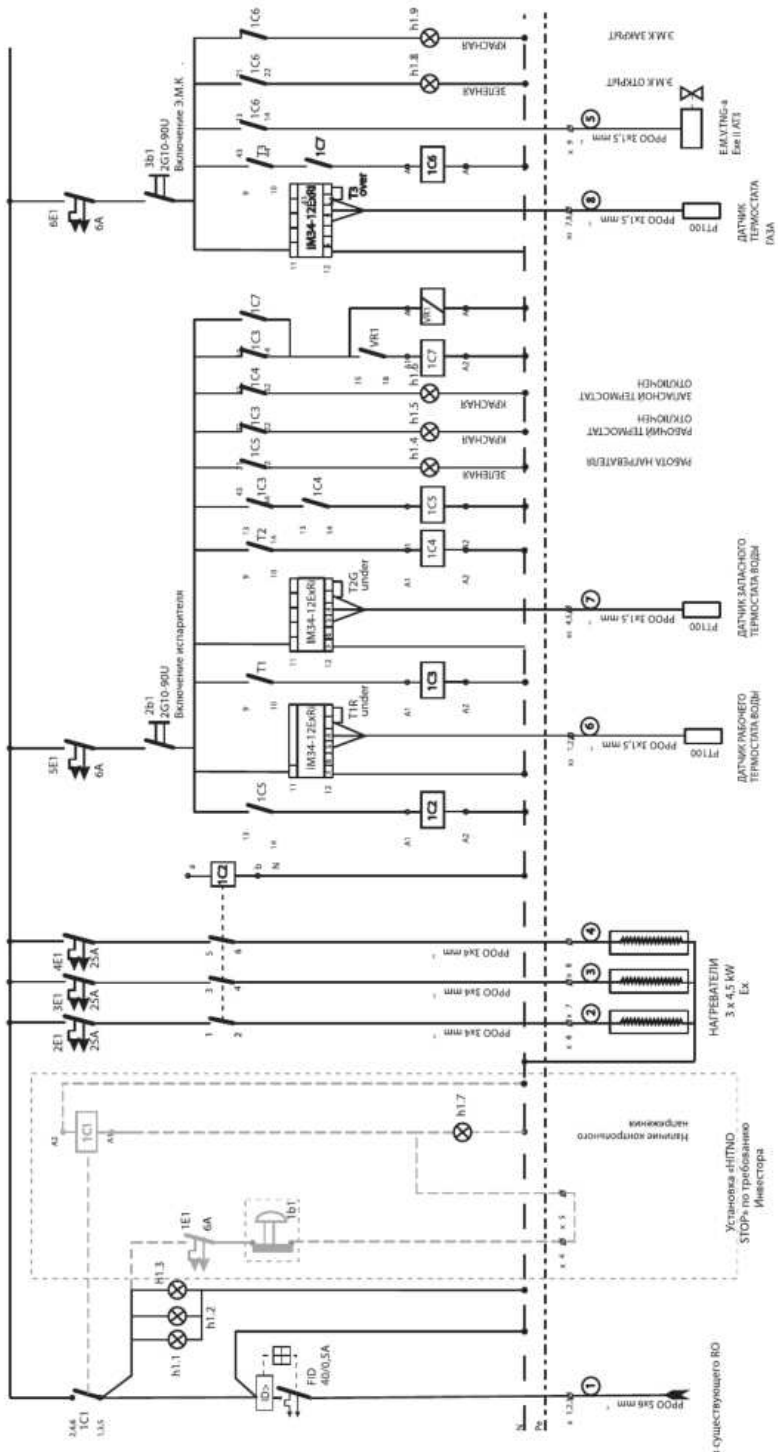

Рис. 8. Электросхема сети

SERIES
420

HEAT EXCHANGERS AND VAPORIZERS FOR

LIQUEFIED PETROLEUM GAS

VAPORIZER (HEAT-TRANSFER MEDIUM—
HOT WATER OR STEAM)

Type: 424/TV

Type: 424/PV



Ex ZONE

SAFE
ZONE



Рис. 1. Испаритель тип: 424/TV

Рис. 2. Распределительный щит

parameters

Capacities:

100,165,200,250,300,400,500,700,800,1000 kg/h (higher on request)

Pressure class: PN25 (gas system), PN16 (hot-water system)

application

PROPANE-BUTANE (LPG)

PURPOSE

Vaporizer (heat-transfer medium: hot water) type 424/TV is used for forced vaporization and reheating of liquefied petroleum gas (LPG), a propane-butane mixture. Liquid LPG enters at an average temperature of 10°C (depending on ambient temperature) and vaporizes at 30-40°C. The heated gas is then ready for compression to operating pressure and delivery through the consumer pipeline. Heating uses hot water in a 90/70°C circuit (water vaporizer) or low-pressure steam at 0.5 bar (steam vaporizer).

DISTRIBUTION PANEL (PS II)

Each vaporizer includes a distribution panel (Fig. 2) for control and monitoring, installed outside the hazardous area. Instrument and power cables run underground; panel connections comply with Ex requirements. The sheet-metal enclosure is IP55 and wall-mounted. Control and switching devices are on DIN rails, indicators and switches on the door; cables enter from below through glands. A matching wiring diagram is supplied (Fig. 8).

EVAPORATOR CONTROL

Operation is temperature-controlled. Two PT100 sensors measure the heat-transfer medium (part 13) and gas (part 11). Signals feed an Ex ia IIC/IIB T4 controller with relay outputs controlling the solenoid valve (part 8). The Ex m II T4 solenoid valve at the liquid-gas inlet acts as a shutoff if the required temperature is not reached or power fails. Before liquid gas enters the

solenoid valve, an impurity trap (part 9) is fitted. Heating capacity is provided by one or more units (depending on vaporizer capacity)

outdoor or wall-mounted gas boilers rated 24-48 kW. They regulate water temperature using return-water temperature. The heat-transfer medium is maintained at 60-90°C. The minimum gas temperature measured by the sensor (part 11) is 25°C; this is required to open the solenoid valve and admit liquid gas. These values may be set only by qualified personnel according to demand and operating conditions.

VAPORIZER START-UP AND OPERATION

Before starting the vaporizer, check the following:

- gas boiler is switched on
- inlet (TF) and outlet (GF) valves are open

Switch on the vaporizer by turning the “Vaporizer ON” switch to

position 1. Automatic solenoid-valve control then starts by turning “EMV ON” to position 1. After reaching operating temperature (10-15 min), the vaporizer

enters automatic operating mode.

When ordering, specify:

- vaporizer type
- CAPACITY IN KG,
- liquid-gas inlet direction (left or right).

The manufacturer reserves the right to modify the technical data presented in this catalog as the equipment production process is improved.

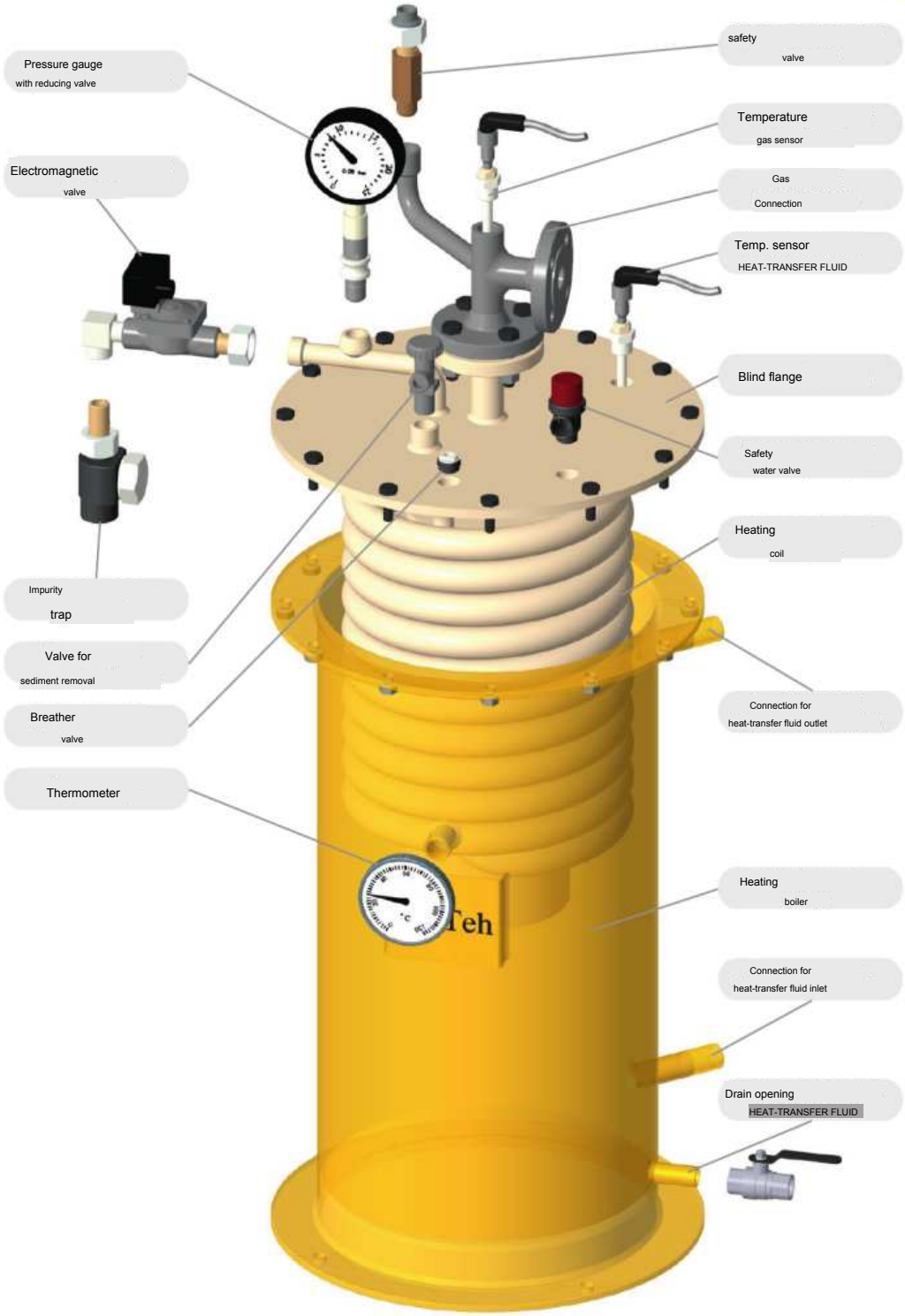

Рис. 3. Испаритель (теплоноситель - горячая вода) тип: 424/TV

The vaporizer comprises three main units (PS):
- gas boiler (PS I)
- heat-transfer-fluid boiler (PS II)
- distribution panel (PS III)

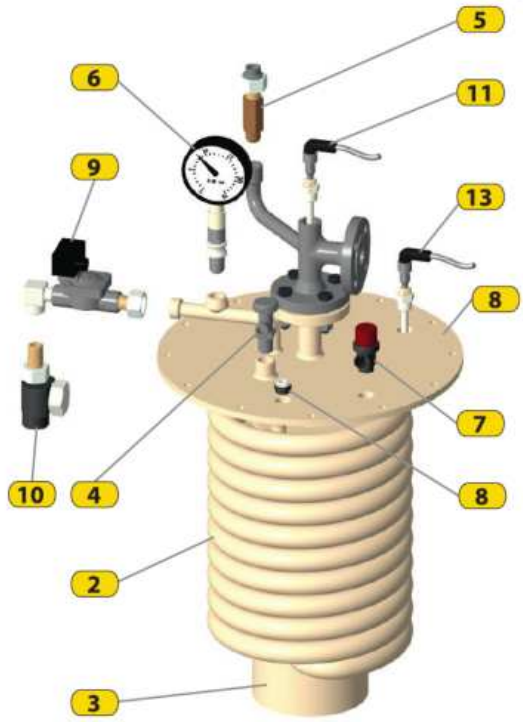

GAS BOILER (PS I)

The gas boiler is an integral unit comprising, besides blind flange (part 1) with heating coil (part 2) and settling tank for liquid gas (part 3), and connections liquid-gas inlet and vapor outlet it also includes safety components – gas temperature sensor (item 11) and solenoid valve (item 9), connected to the control panel (PS II).

Also fitted: sediment drain valve (item 4), gas safety relief valve (item 5) and pressure gauge with pressure-reducing valve (item 6), water safety valve (item 7), and breather valve (item 8). Upstream of the solenoid valve an impurity trap (item 10) is installed.

Racor P59

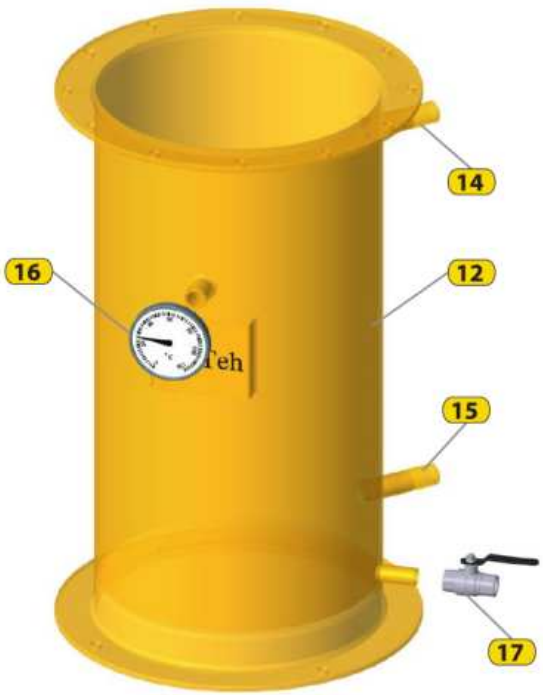

Рис. 5. Котел теплоносителя (PS II)

HEAT-TRANSFER-FLUID BOILER (PS II)

Heating boiler (item 12) is intended to hold the required liquid volume and heating coil (item 2) with vessel for liquid-gas accumulation (item 3). On the heating boiler are connections for the inlet (item 14) and outlet (item 15) of heat-transfer fluid, thermometer (item 16) for water-temperature measurement and an opening for draining heat-transfer fluid (item 17). To control the solenoid valve (item 9), a temperature sensor is installed (item 13), connected to a thermostat in the control panel (PS III).

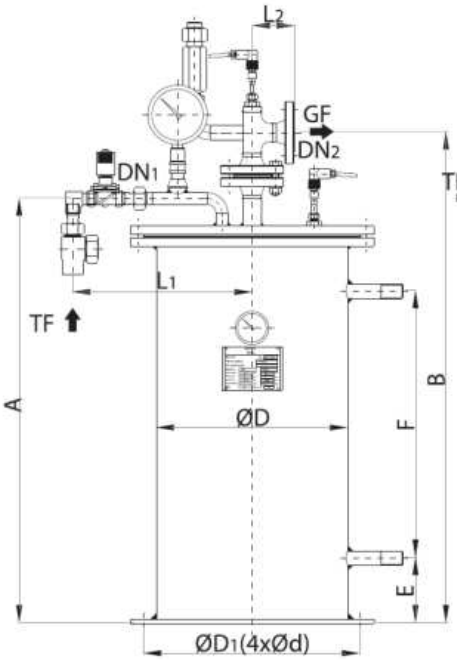

Fig. 6. Vaporizer (heat-transfer fluid – hot water), type: 424/T\ 100–200 kg/h

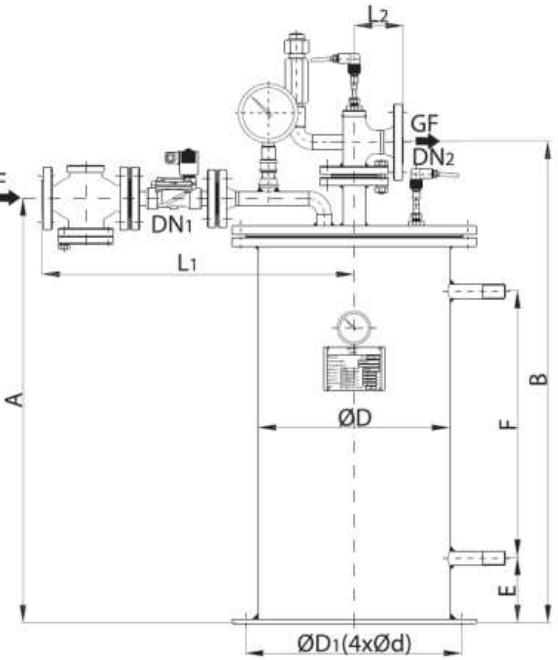

Fig. 7. Vaporizer (heat-transfer fluid – hot water), type: 424/TV 250–1000 kg/h

Мощность (кг/ч)	A	B	D	D1	d	E	F	L1	L2	объем теплоносителя (литры)	Соединения			Предохр. клапан тип: 215
	(mm)										TF(DN1)	GF(DN2) для воды		
100	780	900	350	400	14	120	490	350	80	45	R1/2"	DN25	G3/4"	G3/4"
165	970	1090	350	400	14	150	660	380	80	53	R3/4"	DN25	G1"	G3/4"
200	1225	1360	350	400	14	150	935	380	90	64	R3/4"	DN32	G1"	G3/4"
250	1395	1500	350	400	14	160	1065	570	90	80	DN25/20	DN32	G1"	G3/4"
300	1605	1710	350	400	14	150	1285	570	90	94	DN25/20	DN32	G1"	G3/4"
400	1310	1360	500	550	14	150	925	635	105	174	DN25	DN40	G5/4"	G3/4"
500	1410	1460	500	550	14	150	1030	635	105	178	DN25	DN40	G5/4"	G1"
700	1765	1810	500	550	14	150	1385	700	115	220	DN32	DN50	G5/4"	G1"
800	1950	2000	500	550	14	150	1570	700	115	250	DN32	DN50	G6/4"	
1000	2260	2320	500	550	14	200	1850	700	130	260	DN32	DN65	G2"	G1"

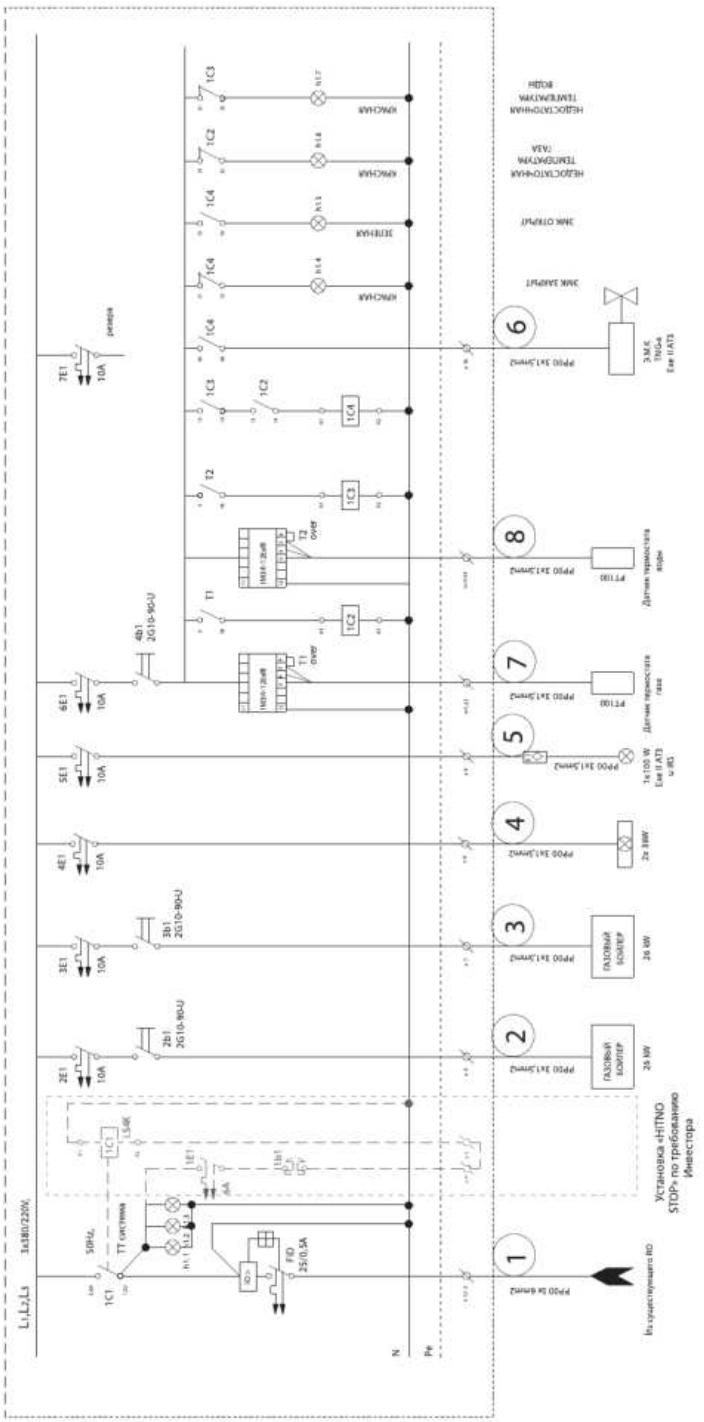

Рис. 8. Электросхема сети

SERIES
430

GAS ODORIZERS

ABSORPTION GAS ODORIZERS



parameters

100 std.m³/h, type 431

500 std.m³/h, type: 432

Pressure class: 4 (12) bar

application

natural gas

Type: 431, 432



PURPOSE, INSTALLATION AND CONNECTION

Natural gas is colourless and odourless, so an odorant must be added for safe leak detection. Absorption odorizers type 431 and 432 add odorant continuously in proportion to gas flow. Odorant vapour mixes with gas in vessel (1) and enters the main stream through outlet (5) and control valve (8). The insulated vessel is installed above ground at an RS or MRS and flange-connected to its outlet. Working pressure: 4 bar, or 12 bar on request. Max. flow: type 431—100 std.m³/h; type 432—500 std.m³/h.

FILLING

Before startup, fill the odorizer carefully to its maximum useful capacity: 1.7 l for type 431 and 7.5 l for type 432, while maintaining the minimum odorant quantity. At constant gas flow and odorization level, this minimum indicates that refilling will be needed within

the next 8–10 days.

For type 431 the minimum odorant quantity is 0.5 kg; for type 432 it is 1.5 kg. One third of this minimum is impurity sediment accumulating over time at the vessel bottom. On request, sediment is removed by the manufacturer or an authorized service company specializing in natural-gas odorization.

Fill the odorizer with odorant as follows:

– close valve (4.1) on inlet connection (4);

– close valve (5.1) on outlet connection (5);

– remove plugs (6) and (7);

– fit the filter to valve (7) and open it slowly to equalize pressure in odorizer vessel (1) with atmosphere;

– using a threaded coupling, connect the PTFE hose to the special portable container holding odorant at 0.5 bar; open the container valve and transfer the required quantity of odorant;

– after filling, close valves (6), (7), remove filter and hose coupling, fit plugs to valves (6) и (7).

CHARACTERISTICS

These absorption odorizer types fully meet the following requirements:

1. PROPORTIONAL DOSING BY QUANTITY

– a control valve adjusts Δp according to gas flow;

– optional differential-pressure gauge for easier adjustment of the odorizer to current gas consumption.

2. SIMPLE OPERATION AND LOW MAINTENANCE

– all odorizer components are made of stainless steel;

– sealing elements are made of PTFE;

– simple design with easy, safe access to all odorizer components;

– the unit is set and adjusted simply and safely.

3. SET DOSAGE MUST BE VISIBLE ON THE UNIT

– accurate, easy-to-read level indicator.

4. USE OF ALL APPROVED ODORANT TYPES

– odorizer permits the main odorant groups (sulfides and thiols with temperature <70 °C).

5. COMPLETE EVAPORATION OF THE ODORIZING AGENT

– vessel insulation and evaporator geometry ensure complete odorant evaporation.

6. ABSOLUTE LEAK-TIGHTNESS OF THE UNIT

– all odorizer connections are stainless steel with identical seals;

– seal material: PTFE;

– stainless-steel shut-off parts and PTFE sealing elements.

DIAGRAM

item	description		
1.	Vessel	5.1.	Valve on outlet connection
2.	Insulation	5.2.	Valve on outlet connection
3.	Level gauge glass	6.	Cock
4.	Inlet connection	7.	Cock
4.1.	Valve on inlet connection	8.	Control valve
4.2.	Valve on inlet connection	9.	Differential-pressure gauge
5.	Outlet connection	9.1.	Differential-gauge valve
		9.2.	Differential-gauge valve

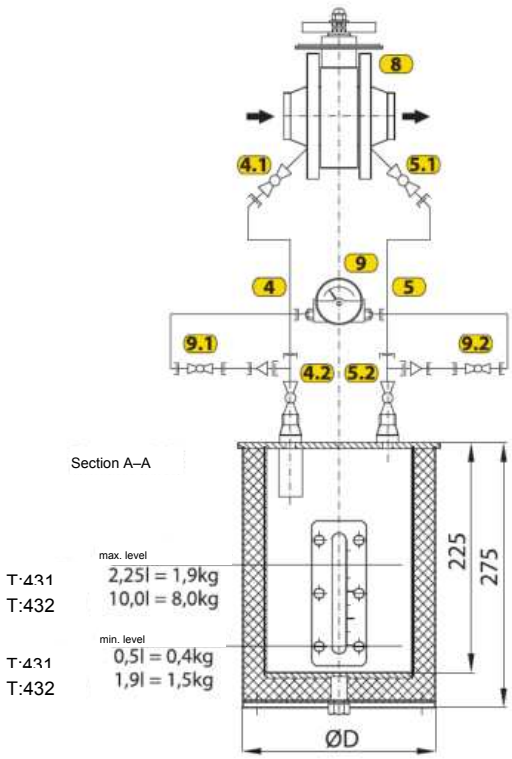

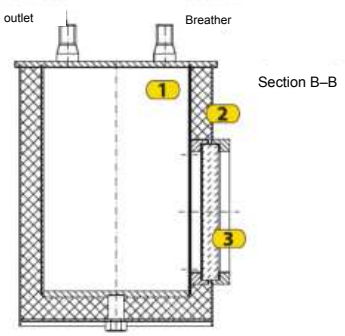

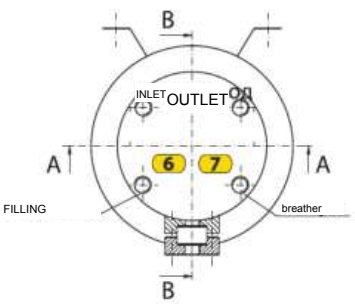

SIZE / TYPE	ØD
431	194
432	354

7. CLOSED FILLING WITHOUT ODOR RELEASE

– the vessel is filled with odorant in a closed system, without leakage or contamination of the environment by odor;

– the odorizer-vessel pressure-equalizing connection accepts a filter preventing odor pollution of the environment (filter installed by odorant supplier during filling).

INSPECTION AND STARTUP

Before adjustment and startup, check every odorizer connection for leaks. Any leakage must first be eliminated to make the unit completely leak-tight. Only then is the odorizer ready for installation and commissioning.

Gradually open valves (4.1), (4.2), (5.1) and (5.2). Gas enters the odorizer vessel, mixes with the odorant, and the mixture then enters the gas stream.

Start the odorizer by first setting Δp at control valve (8), moving its handle and checking the pressure drop on differential gauge (9). To measure Δp, close inlet valve (4.2) and the valve at outlet (5.2).

Initially keep the gauge valve open; fully open differential-gauge impulse valves (9.1) and (9.2). Close the gauge valve and read Δp. Adjust control valve to 100–150 mbar for summer use or 150–200 mbar for winter use. Then close the differential-gauge impulse valves and reopen the gauge valve. Fully open inlet valve (4.2), then outlet valve (5.2). For every odorizer, especially absorption types, check the odorization level (odorant concentration in natural gas, mg/std.m³) and odor intensity; correct the setting if the odor is too weak or strong. Odorant consumption equals the level change (kg) divided by gas consumption (std.m³), giving the average odorant concentration for the previous weekly or two-week period.

control).

The manufacturer reserves the right to modify the technical data presented in this catalog as the equipment production process is improved.

SERIES
430

GAS ODORIZERS

ABSORPTION GAS ODORIZERS



parameters

Capacity: 2000 std m³/h 433

5000 std. m³/h 434

10000 std m³/h type: 435

Pressure class: 4 (12) bar

application

natural gas

Types: 433, 434, 435

PURPOSE, INSTALLATION AND CONNECTION

Natural gas is colourless and odourless, so prescribed odorant is added for public supply to reveal leaks and improve safety. Absorption odorizers types 433, 434 and 435 continuously dose odorant in proportion to gas flow. Vapour mixes with gas in tank chamber (1), exits through connection (2) and enters the main stream via control valve (3). The tank is buried in sand for stable temperature; an above-ground sand vessel is optional. The control-valve flange connects to an existing RS or MRS outlet.

Absorption odorizers types 433, 434 and 435 operate up to 4 bar (12 bar on request), with maximum flows of 2000, 5000 and 10000 std m³/h.

FILLING

Before start-up, fill the odorizer with odorant to its maximum volume: type 433—30 l, type 434—70 l, type 435—100 l. The minimum quantity is that allowing 8-10 days before refill at unchanged flow and odorization: type 433—3 l, type 434—6 l, type 435—8 l. One third of this minimum is sediment from impurities accumulating on the tank bottom. Sediment removal is performed on request by the manufacturer or an authorized natural-gas odorization service company.

Fill the odorizer with odorant as follows:

– close valve (4.1) on inlet connection (4);

- close valve (2.1) on outlet connection (2);

- remove plugs from valves (5) and (7);

- fit a filter to valve (5) and open slowly to equalize pressure in odorizer tank (1) with atmosphere;

– using a threaded coupling, connect the PTFE hose to the special portable container holding odorant at 0.5 bar; open the container valve and transfer the required quantity of odorant;

- after filling, close valves (7) и (5), remove filter and hose coupling; fit plugs to valves (7) and (5)

- gradually open valves (4.1) and (2.1).

CHARACTERISTICS

New absorption odorizers types 433, 434 and 435 fully meet these requirements:

1. PROPORTIONAL DOSING BY QUANTITY

- control valve permits Δp adjustment according to gas flow;

– optional differential-pressure gauge for easier adjustment of the odorizer to current gas consumption.

2. SIMPLE OPERATION AND LOW MAINTENANCE

– all odorizer components are made of stainless steel;

– sealing elements are made of PTFE;

– simple design with easy, safe access to all odorizer components;

– the unit is set and adjusted simply and safely.

3. SET DOSAGE MUST BE VISIBLE ON THE UNIT

- accurate, simple indicator reads odorant level to 0.1445 kg;

- stainless-steel indicator, without glass parts or odorant-leak risk.

4. USE OF ALL APPROVED ODORANT TYPES

– odorizer permits the main odorant groups (sulfides and thiols with temperature <70 °C).

5. COMPLETE EVAPORATION OF THE ODORIZING AGENT

– vessel insulation and evaporator geometry ensure complete odorant evaporation.

6. ABSOLUTE LEAK-TIGHTNESS OF THE UNIT

– all odorizer connections are stainless steel with identical seals;

– seal material: PTFE;

– stainless-steel shut-off parts and PTFE sealing elements.

DIAGRAM

Pos.	DESCRIPTION		
1.	Vessel	4.1	Valve on inlet connection
2.	Outlet connection	4.2	Valve on inlet connection
2.1	Valve on outlet connection	5.	Valve (breather)
2.2	Valve on outlet connection	6.	Differential-pressure gauge
3.	Control valve	6.1	Differential-gauge valve
4.	Inlet connection	6.2	Differential-gauge valve
		7.	Cock

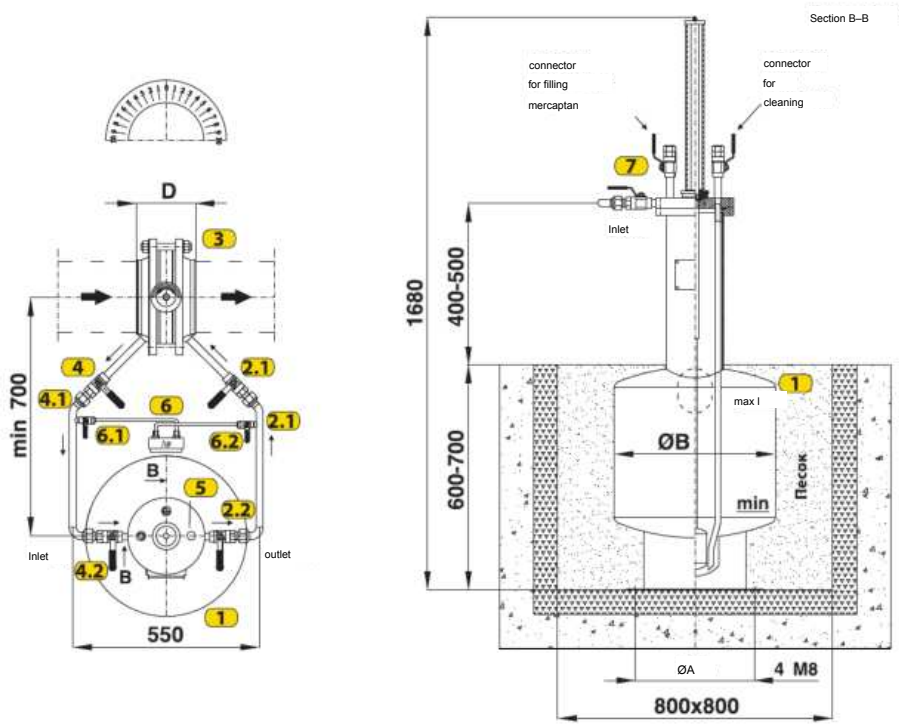

DIAGRAM

размер / тип:	ØA (mm)	ØB (mm)	$V_{макс\ емк.}$ (l)	V_p (l)	D (mm) DN40	DN50	DN65	DN80	DN100	DN150	DN200
433	250	315	40	30	125	135	135				
434	350	470	90	70	125	135	135	145	150	150	
435	420	600	150	100							175

Volume required to fill the odorizer from minimum to maximum permitted level, measured from minimum, is designated Vp.

7. CLOSED FILLING WITHOUT ODOR RELEASE

– the vessel is filled with odorant in a closed system, without leakage or contamination of the environment by odor;

– the odorizer-vessel pressure-equalizing connection accepts a filter preventing odor pollution of the environment (filter installed by odorant supplier during filling).

INSPECTION AND STARTUP

Before adjustment and startup, check every odorizer connection for leaks. Any leakage must first be eliminated to make the unit completely leak-tight. Only then is the odorizer ready for installation and commissioning.

Start-up begins by setting Δp on control valve (3) with its handle and checking differential pressure on gauge (6). To measure Δp, close inlet valve (4.2) and the valve at outlet (2.2).

The differential-gauge valve is initially open; valves (6.1) and (6.2) on impulse lines are also fully opened. Close the gauge valve and read Δp. Adjust the control valve to 100-150 mbar for summer consumption and 150-200 mbar for winter consumption. Then the differential-gauge impulse-line valves are closed and the gauge valve is opened.

Gradually open inlet valve (4.2) fully, then outlet valve (2.2). For every odorizer, especially absorption types, monitor the odorization level (odorant concentration in natural gas, mg/std m³) and odour intensity; adjust the odorizer as needed if the odour is weak or too strong.

Odorant consumption is checked by dividing the level value (kg) by gas consumed (corrected std m³), giving the odorant concentration in natural gas for the preceding period (weekly or fortnightly check).

The manufacturer reserves the right to modify the technical data presented in this catalog as the equipment production process is improved.

SERIES
450

SILENCERS

silencer



Type: 451



parameters

Sizes: DN65/DN(100,150), DN80/DN(150,200)
DN100/DN(200, 250, 300), DN150/DN(250, 300, 400)
DN200/DN(300, 400)
PN16, ANSI1500, ANSI300, ANSI600

application

NATURAL GAS, PROPANE-BUTANE,
AIR, NITROGEN, TECH. GASES

purpose

Silencer type 451 reduces noise in the pressure-reduction line of gas installations. Pipeline noise depends primarily on gas velocity. Its intensity spans a broad frequency range from 1 to 8 kHz.

Silencer type 451 is manufactured to PN or ANSI standards. Its connection to the regulator and gas pipeline is flanged.

Noise reduction occurs in three stages:

1. Gas passes through the flow-guiding device (item 2);
2. Gas passes through the springs (item 5);
3. Gas passes through staggered perforated plates (items 3; 4).

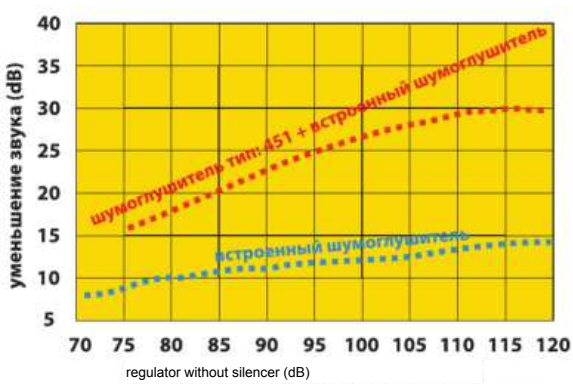

Characteristics:

1. Noise reduction up to 25 dB (max. 30 dB). (type 451 + built-in silencer)
2. Maximum intensity at frequencies 1-8 kHz.
3. Flow loss up to 18%.
4. Silencer type 451 is easy to install and maintain.
5. Noise reduction by the built-in silencer: 10 dB (max. 12 dB).

materials

item	description	material
1	body	Steel C0361
2	Gas-flow guiding device	Steel C0361
3	Front perforated plate	Steel C0361
4	Rear perforated plate	Steel C0361
5	Springs	steel
6	Fastening screw	DIN 580

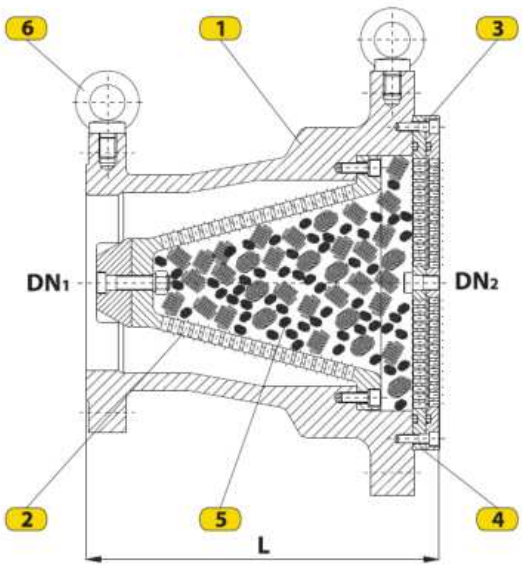

dimensions

DN_1	65		80		100			150			200	
DN_2	100	150	150	200	200	250	300	200	250	300	300	400
L	250	250	280	300	350	380	400	380	400	450	400	450

Built-in silencer

— noise reduction up to 10 dB (max. 12 dB);

— installed for regulator series 130 and 140;

— easy to maintain and install;

— for slight noise reduction, it may be installed without type 451 silencer.

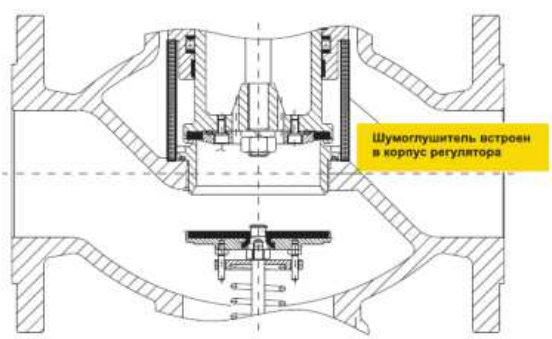

The manufacturer reserves the right to modify the technical data presented in this catalog as the equipment production process is improved.

SERIES 510

INSULATING PIPELINE CONNECTIONS

INSULATING COUPLINGS



parameters

Sizes:

G3/4"÷G2½" PN16/25, ANSI150 - type 511

DN25÷DN500 PN16÷100, ANSI150÷600 - type 512

application

Type: 512 NATURAL GAS, PROPANE-BUTANE, AIR,

Type: 511 NITROGEN, OTHER NON-AGGRESSIVE GASES, OIL AND ITS DERIVATIVES, WATER AND NON-AGGRESSIVE MEDIA

purpose

Insulating couplings types 511 and 512 electrically (galvanically) isolate the above-ground and underground sections of a steel pipeline to prevent atmospheric effects through metal pipe walls and avoid gas fire or explosion. They are installed in the above-ground pipeline, horizontally or vertically.

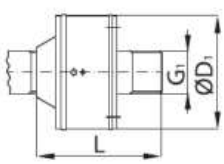

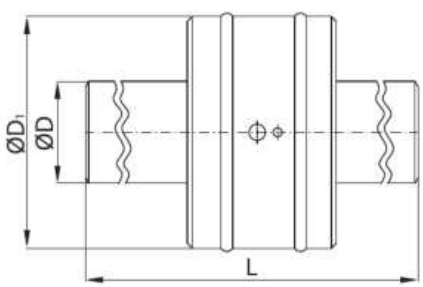

dimensions

Type: 511

PRESSURE CLASS		PN16, ANSI150					
SIZE	DN	20	25	32	40	50	65
G1		3/4"	1"	1¼"	1½"	2"	2½"
ØD1	(mm)	76,1	88,9	88,9	114,3	139,7	168,3
L		85	98	105	115	125	140

Type: 512

PRESSURE CLASS		PN16÷PN63, ANSI150÷ANSI600															
SIZE	DN	25	32	40	50	65	80	100	125	150	200	250	300	350	400	450	500
ØD		33,7	42,4	48,3	60,3	76,1	88,9	114,3	139,7	168,3	219,1	273,1	323,9	355,6	406,4	457	508
ØD1	(mm)	88,9	88,9	114,3	139,7	168,3	168,3	219,1	273,1	273,1	323,9	355,6	419	457	508	559	610
L		400	400	400	480	480	480	480	480	480	480	700	700	700	700	700	1000

ANSI 600 (PN100) sizes are available on request.

diagram

Item	description
1.	Flanges (left and right)
2.	Outer ring
3.	Filter cartridge
4.	Insulating material
5.	O-ring
6.	Centre plate
7.	Connecting pipes

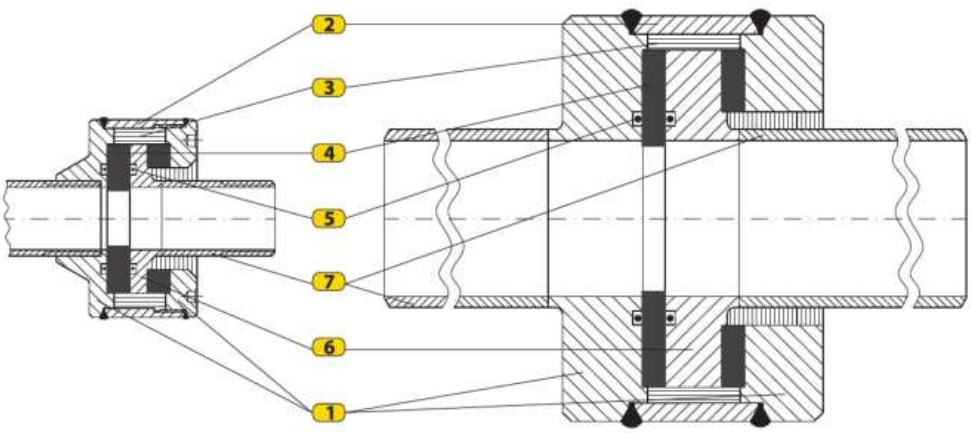

operating principle

Insulating-coupling components are made of high-quality materials. They are welded together to provide a reliable, compact

design. Coupling type 511 connects to the pipeline by threaded joints at both ends, while type 512 is welded. Connecting-pipe ends (7) are machined and prepared for connection by thread (or

welding).

Note

Strength and leak-tightness tests use hydraulic pressure 50% above the applicable nominal pressure (DIN 3389, DIN 2470, parts 1 and 2). Electrical insulation is verified by two tests (DIN 30690, part 1):

- AC test (5000 V, 50 Hz, 1 min),
- DC test (500 V, 2 min).

The outer surface of the insulating material is protected by primer and topcoat for metal, then wrapped with two layers of insulating tape. The couplings are intended for pipelines carrying media at T ≤ 60°C, and for hot water with variable temperature up to 150°C and continuous

temperature up to 130°C.

Insulating couplings types 511 and 512 comply with SRPS EN 13480 and
DIN 30690-1:2006-02.

The manufacturer reserves the right to modify the technical data presented in this catalog as the equipment production process is improved.

SERIES 510

INSULATING PIPELINE CONNECTIONS

INSULATING FLANGE JOINT



Type: 514

parameters

Sizes:

DN25–DN250 PN16/25, ANSI150/ANSI300

application

NATURAL GAS, PROPANE-BUTANE, AIR, NITROGEN, OTHER NON-AGGRESSIVE GASES, OIL AND ITS DERIVATIVES, WATER AND NON-AGGRESSIVE MEDIA

purpose

Insulating flange type 514 provides electrical (galvanic) isolation of the above-ground and underground sections of a steel pipeline to prevent atmospheric effects (through the walls of metal pipes), gas fire or explosion. It is installed in the above-ground pipeline in a horizontal or vertical position.

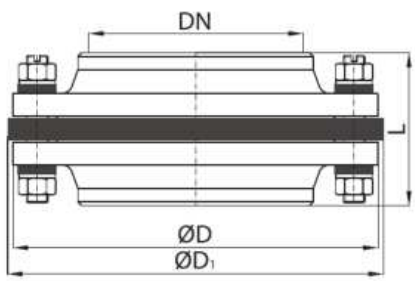

dimensions

DN	Класс давл.	PN16/25			ANSI150			ANSI300		
		L	ØD	ØD1	L	ØD	ØD1	L	ØD	ØD1
		(mm)			(mm)			(mm)		
25	1"	85	115	125	130	108	118	143	124	134
32	1 1/4"	90	140	150	133	117	127	149	133	143
40	1 1/2"	95	150	165	143	127	137	155	155	165
50	2"	100	165	180	146	152	162	159	165	175
65	2 1/2"	100	185	195	159	178	188	171	190	200
80	3"	110	200	210	159	190	200	178	210	220
100	4"	115	220	230	171	228	238	190	254	264
125	5"	120	250	260	197	254	264	216	280	290
150	6"	120	285	295	197	279	289	216	318	328
200	8"	135	340	350	223	343	353	241	381	391
250	10"	150	405	415	223	406	416	254	445	455

diagram

item	description
1.	Welding-neck flange
2.	Insulating ring
3.	O-ring
4.	Screw
5.	Insulating sleeve
6.	Insulating gasket
7.	Nut

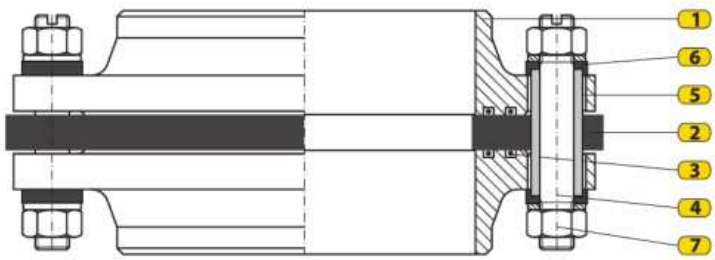

INSTALLATION

For pipeline installation, fully isolate the flange while welding each flange end to the pipe with three to four weld beads up to 1 cm long. Completely dismantle the insulating flange, including insulating parts and gasket, to protect them from heat during final welding. After both flanges are welded, reinstall the removed parts. Tighten the bolts until the gasket joints are completely leak-tight.

Note

Testing comprises two tests (DIN 30690, part 1):

- AC test (5000 V, 50 Hz, 1 min),
- DC test (500 V, 2 min).

External flange surfaces are protected with two coats of metal primer and topcoat. Other metal parts are zinc-plated. Insulating flanges are intended for pipelines carrying media at t ≤ 60 °C.

Insulating flange type 514 complies with DIN 2470-1:1987-12 and DIN 30690-1:2006-02.

The manufacturer reserves the right to modify the technical data presented in this catalog as the equipment production process is improved.

SERIES 610

CONTROL EQUIPMENT

LIQUID FLOW INDICATOR



Type: 611

parameters

Sizes:

DN32÷DN150 PN16÷40, ANSI150/ANSI300

application

PROPANE-BUTANE, OIL AND

OTHER LIQUIDS

purpose

Liquid flow indicator type 611 is used in propane-butane, oil and other liquid systems where visual confirmation of flow through the pipeline is required. It is installed horizontally in the pipeline with flanged connections, as shown in the drawing.

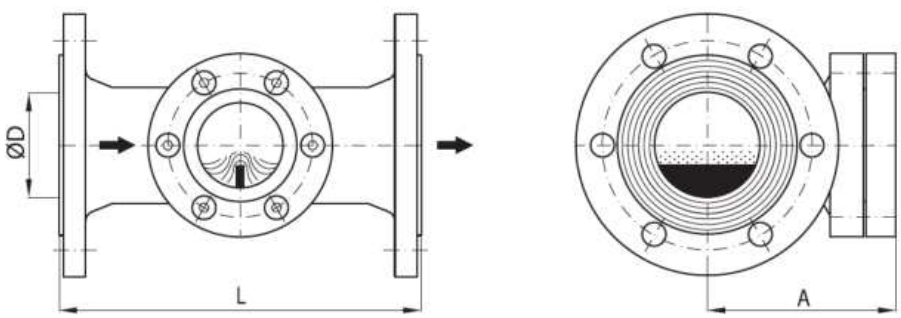

dimensions

SIZE \ DN	p	32	40	50	65	80	100	150
ØD	(mm)	32	40	50	65	80	100	150
A		124	115	124	135	145	165	195
L		180	200	230	260	290	340	440

diagram

item	description
1.	body
2.	Baffle
3.	Sealing ring
4.	Glass
5.	Coating

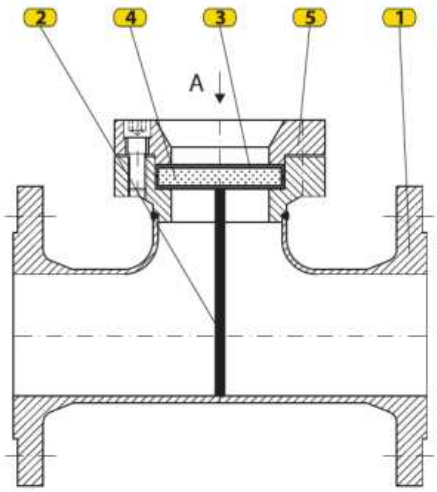

View “A”

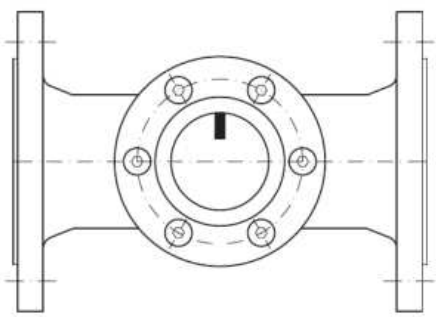

operating principle

As liquid flows through flow-indicator body (1), it strikes baffle (2), passes it and continues through the pipeline. Looking through glass (4) provides visual confirmation that liquid is flowing.

The manufacturer reserves the right to modify the technical data presented in this catalog as the equipment production process is improved.

SERIES 610

MEASURING EQUIPMENT

DIFFERENTIAL PRESSURE INDICATOR

pressure



Type: 616



parameters	
Differential-pressure range: 0-20; 0-40; 0-60; 0-80; 0-100 (kPa)	
Working pressure:	PN75 (kgf/cm²)
Accuracy class:	indicator, class 4%
Connection:	G1/4"
Operating temperature:	max. 100 °C
Scale:	linear, 120°

application

Non-aggressive gases,

demineralized water,

aggressive liquids

purpose

Differential-pressure indicator type 616 measures pressure drop across filters, process equipment, valves and other devices. Its simple design ensures reliable operation and easy servicing. On request, limit electrical contacts are fitted to signal maximum and minimum differential pressure.

description	material
body	aluminum
Piston	Stainless steel
Magnets	Ferrite
spring	Stainless steel
connection	brass
Seals	Rubber, PTFE

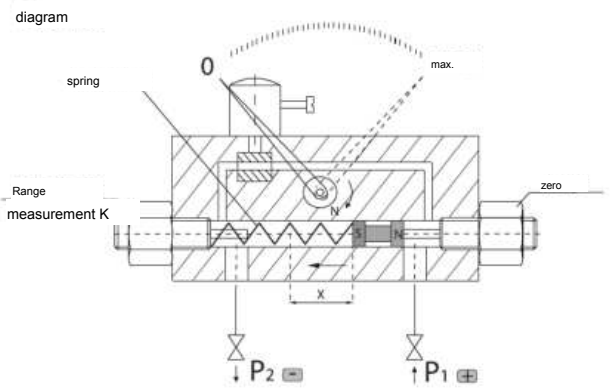

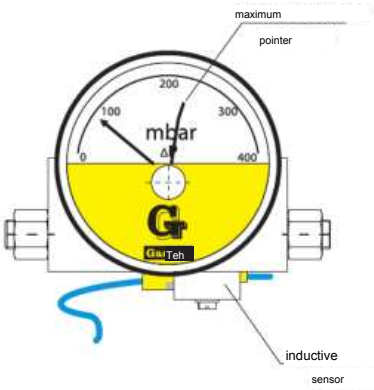

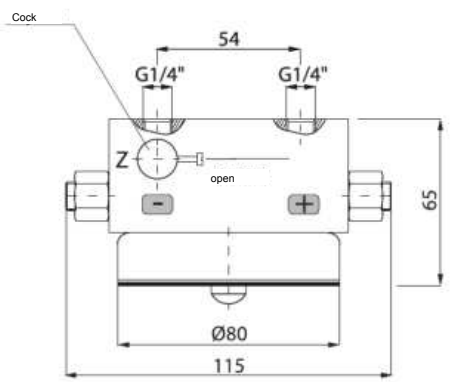

operation

Indicator 616-120 has an aluminium body and gauge. A free piston in its cylindrical bore is acted on by + and - ports and a measuring spring, making travel proportional to differential pressure. Coupled magnets convert piston travel to pointer rotation without fluid contact. An optional top valve enables shock-free connection; a max pointer retains peak pressure. If fouled, clean piston and bore with non-aggressive solvent, apply silicone grease, refit for free travel, and adjust zero/range with end screws.

The manufacturer reserves the right to modify the technical data presented in this catalog as the equipment production process is improved.

SERIES
620

MEASURING DEVICES

ROTARY LIQUID LEVEL GAUGE

FOR TANKS AND ROAD TANKERS



Type: 621

parameters

Sizes:

NPT 1"/DN50, DN80 PN25

D=1000-3000 mm (tank diameter)

application

PROPANE-BUTANE (LPG)

purpose

Rotary liquid level gauge type 621 is installed on stationary horizontal above-ground tanks and road tankers to measure liquid level, usually propane-butane. It has a scale indicating liquid level from 0 to 100%.

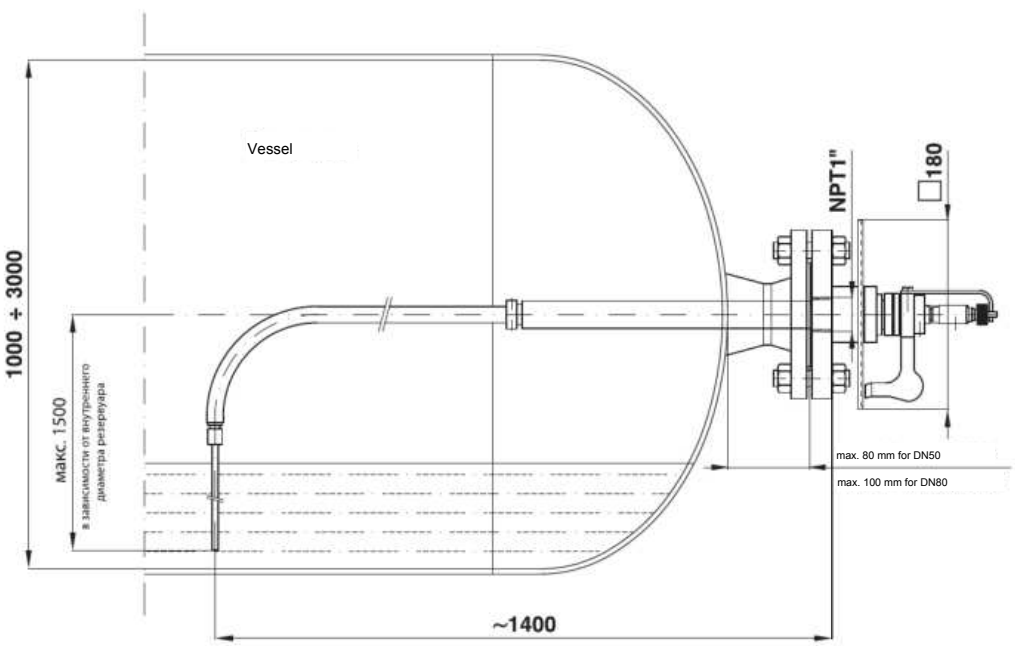

diagram

item	description	item	description
1.	Measuring scale	6.	Nozzle seat
2.	Pointer and handle	7.	Nozzle
3.	Screw	8.	Valve plug
4.	Tube	9.	Stop
5.	Flat flange	10.	Tube outlet stop

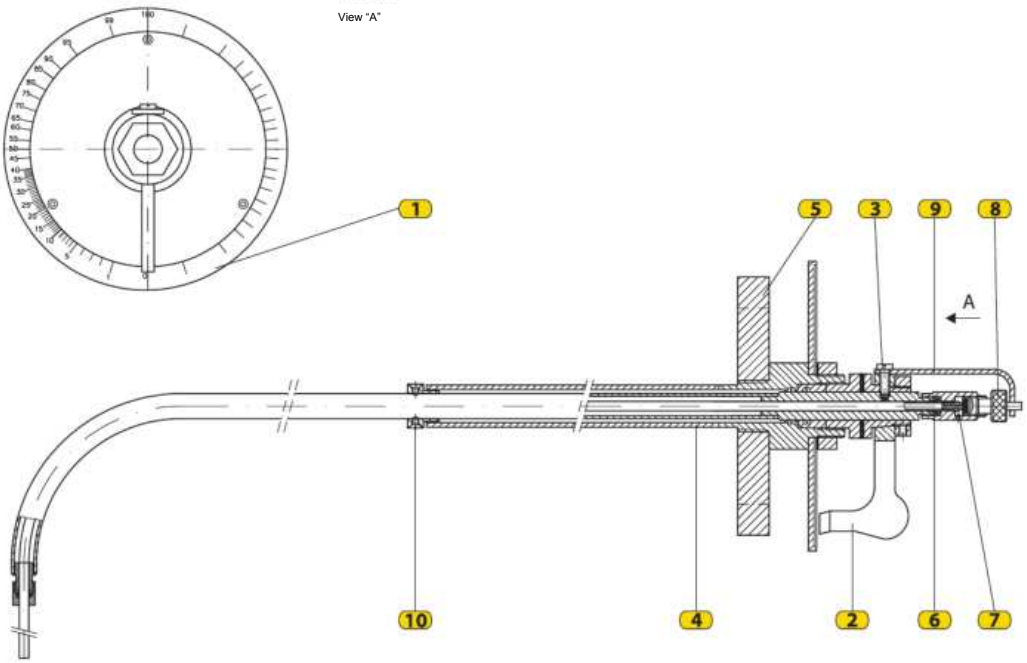

operating principle

First turn handle (2) to the upper vertical position, 100% on scale (1). Unscrew valve plug (8), moving the rubber seal off nozzle seat (6); gas then vents from the tank through nozzle (7). Turn the handle left until liquid begins to flow from the nozzle. Read the scale, which indicates tank fill from 0 to 100%. Then close the valve and return the handle to its initial position.

INSTALLATION AND CONNECTION

Rotary liquid level gauge type 621 is mounted on the tank by a flanged connection. Its flat flange (5), with NPT1 internal thread, is bolted to the tank-nozzle flange. The nozzle flange must be DN50 or DN80, and the distance from flange to nozzle must not exceed 80 mm or 100 mm respectively, as shown.

Smaller rotary liquid level gauges can be manufactured at the

customer's request.

The manufacturer reserves the right to modify the technical data presented in this catalog as the equipment production process is improved.

SERIES
620

MEASURING DEVICES

THREE-POSITION LIQUID
LEVEL INDICATOR

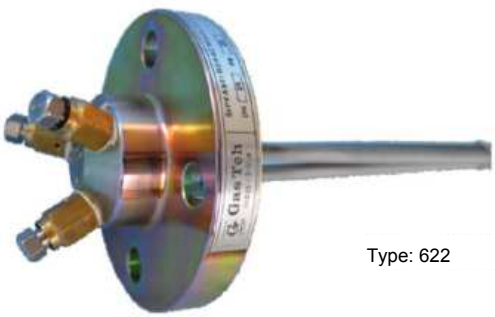

Type: 622

parameters

Sizes:

DN25 PN25,ANSI150

application

LIQUEFIED PETROLEUM GAS

AND OTHER FLUIDS

purpose

Three-position level indicator type 622 is installed on cylindrical storage tanks for liquefied petroleum gas or other fluids to measure their liquid level. It is suitable for above-ground and underground tanks. Temperature range: (-20 to +50) °C.

dimensions

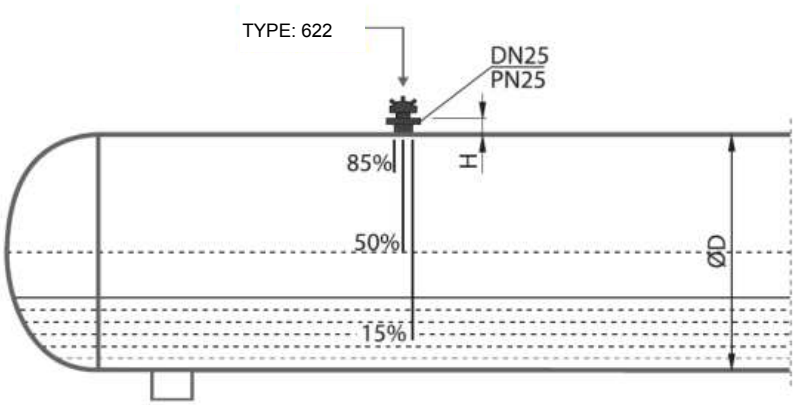

When ordering the measuring device, specify tank diameter (OD) and flange neck height (H) on which the indicator will be installed.

diagram

item	description
1.	Indicator body
2.	valve
3.	Screw
4.	Connection
5.	Tube

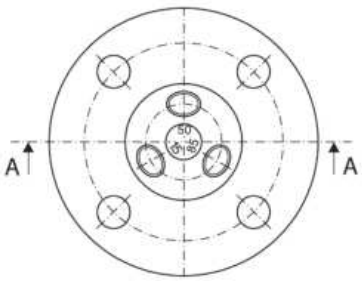

Section “A-A”

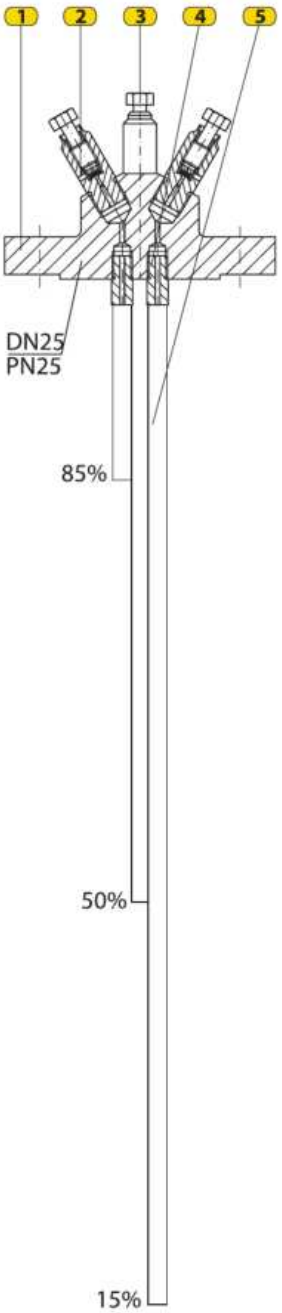

operating principle

Tubes (5) of different lengths are installed in the lower part of indicator (1). When the indicator is mounted on the tank, they extend to different liquid depths and thus indicate

tank level percentages (15%, 50%, 85%). Three valves (2) at the top are connected to the tubes through channels. Using valve screw (3),

gas discharge is checked, as is the fluid level

in the tank.

Three-position level indicator type 622 is mounted on a tank connection DN25 PN25. Maximum working pressure is 16,7 bar; testing is normally performed at 25 bar.

The manufacturer reserves the right to change the product’s technical data to improve

the product.

SERIES 620

MEASURING DEVICES

MAGNETIC-TRANSMISSION LEVEL GAUGE



Type: 624-H, 624-V

parameters

Sizes:

NPT 1"/DN50, DN80 PN25

Tank diameters: OD=1500-3200 mm

application

LIQUEFIED PETROLEUM GAS

AND OTHER FLUIDS

purpose

Magnetic-transmission level gauges type 624 are installed on cylindrical storage tanks for liquefied petroleum gas or other fluids to measure liquid level. They are

installed:

- on above-ground tanks (type 624-H, horizontal gauge installation);
- on underground tanks (type 624-V, vertical gauge installation).

Temperature range (-20 to +50) °C.

dimensions

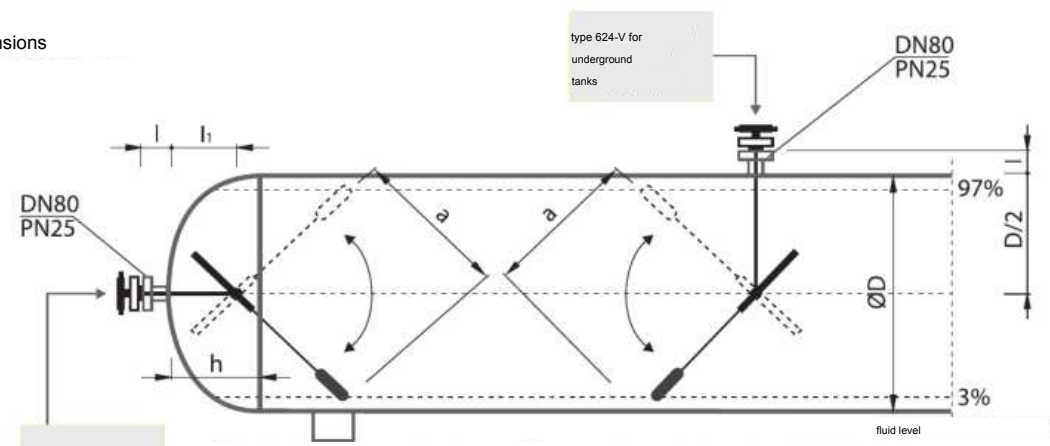

When ordering, specify the following parameters of the tank receiving the gauge: ØD, l, l1, h.

a - determined from the known tank diameter.

diagram

Nos.	description
1.	Scale housing
2.	Protective sleeve
3.	Flange
4.	Carrier tube
5.	Float arm
6.	float

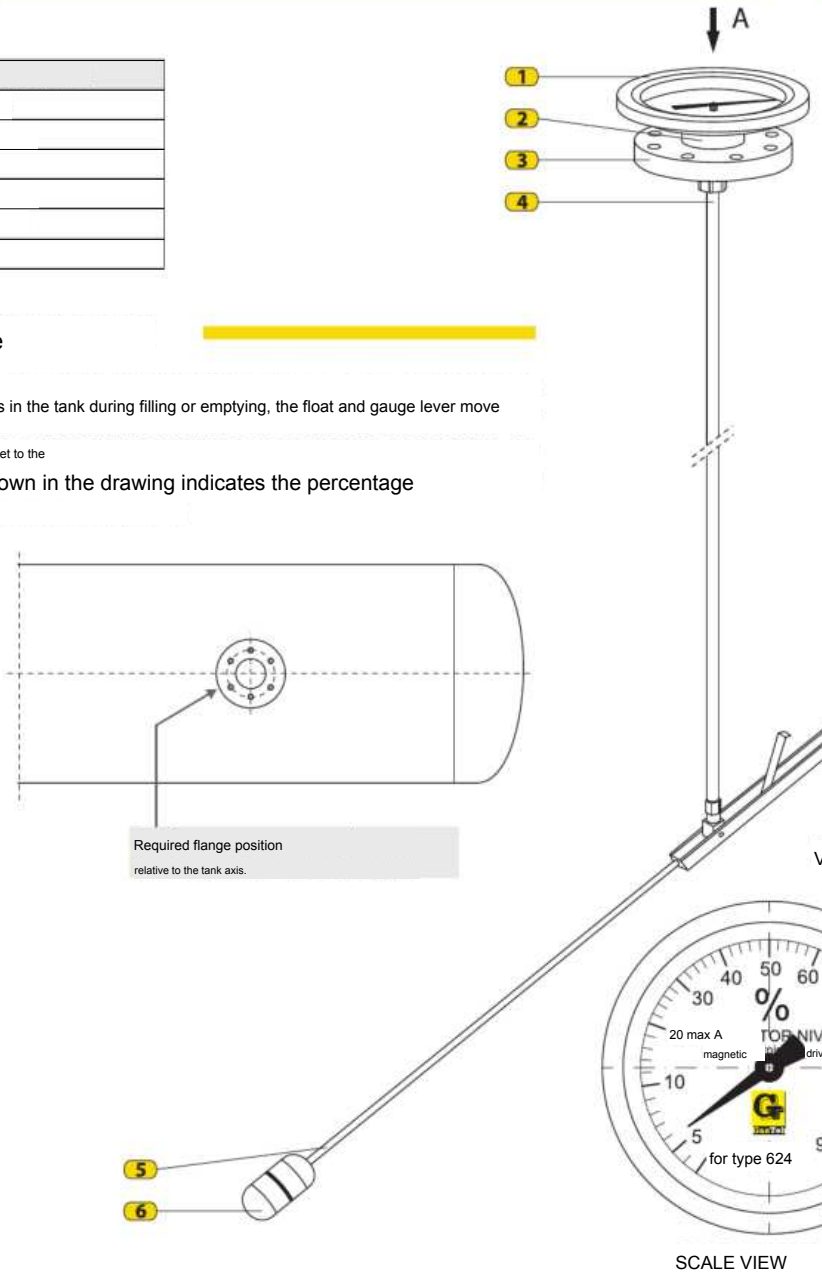

operating principle

As liquid level rises or falls in the tank during filling or emptying, the float and gauge lever move

and transmit the reading by magnet to the

scale. The scale shown in the drawing indicates the percentage

tank level ratio.

operating principle

Level gauge type 624 is mounted on a tank connection DN80 PN25; therefore the dimensions shown in the installation diagram are required. Float-arm length depends on tank diameter. Maximum working pressure is 16,7 bar; testing is normally at 25 bar. Magnetic-transmission gauges with other parameters and sizes can be supplied on request.

The manufacturer reserves the right to change the product technical data in order to improve

product manufacturing.

SERIES
750

TWO-JET MIXER

VENTURI TYPE, LPG/AIR

TWO-JET MIXER,

VENTURI TYPE



Type: 751

parameters

preg=2.5–6 bar

pout=100–500 mbar

Capacity and connection sizes

- 2000 kW, 3/4"/ 1½"/ 2"
- 3000 kW, 3/4"/ 2"/ 2½"
- 4500 kW, 1"/ 2"/ 3"

application

SYNTHETIC NATURAL GAS PRODUCTION

– LPG/AIR (SNG) – natural-gas substitutes

purpose

The two-stage Venturi mixer type 751 produces a gaseous liquefied petroleum gas (LPG)/air mixture with properties matching natural gas, allowing fuel substitution without interruption or readjustment of burners, boilers, etc. This gaseous LPG/air mixture is called synthetic natural gas (SNG). Producing SNG by drawing atmospheric air into the LPG is reliable and

safe because it prevents an explosive mixture. SNG is produced using pure propane or a standard factory LPG blend (up to 65% butane, at least 35% propane). Gas mixer type 751 provides a gas mixture with heating value below 55000 kJ/std.m³ ±2%.

heating value.

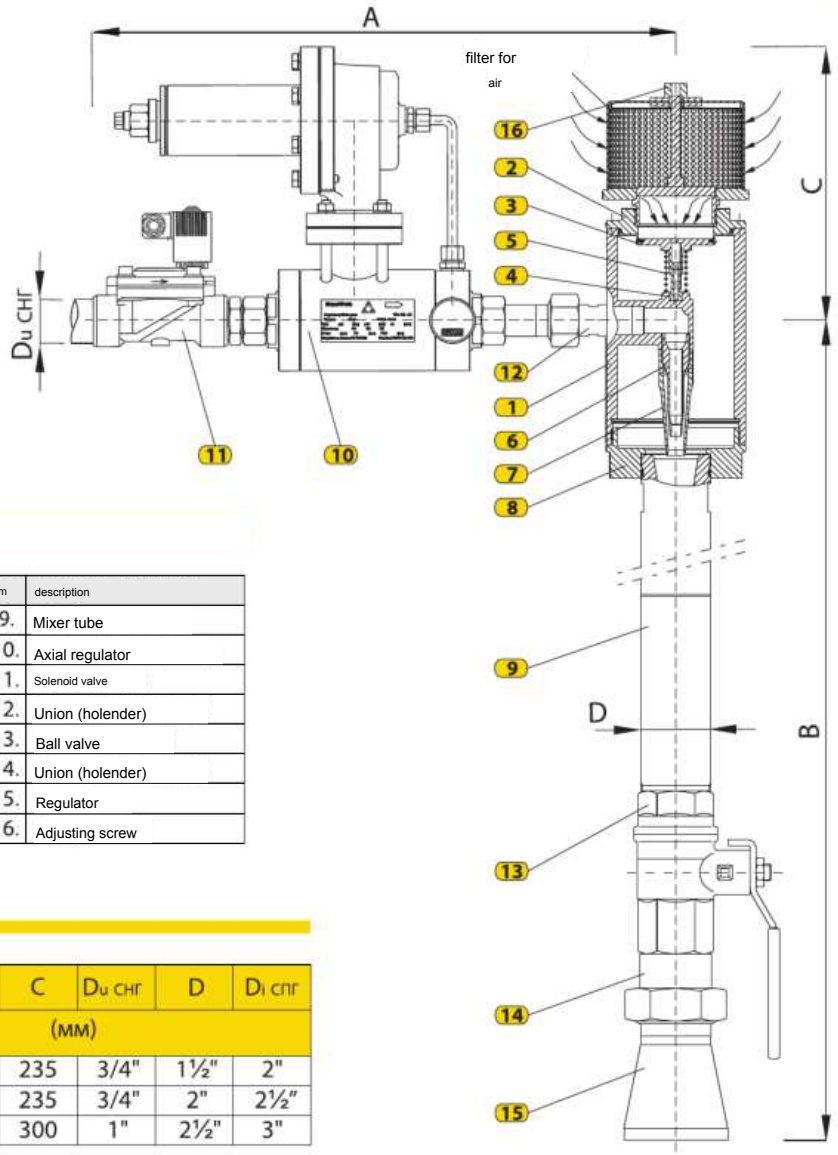

Di SNG

DIAGRAM

item	description	item	description
1.	Mixer body	9.	Mixer tube
2.	Valve seat	10.	Axial regulator
3.	valve	11.	Solenoid valve
4.	Valve stem	12.	Union (holender)
5.	spring	13.	Ball valve
6.	Nozzle – first stage	14.	Union (holender)
7.	Nozzle – second stage	15.	Regulator
8.	Mixer-tube support	16.	Adjusting screw

dimensions

SIZE P / тип	A	B	C	Du СНГ	D	Di СПГ
	(мм)					
2000 kW	480	720	235	3/4"	1½"	2"
3000 kW	500	850	235	3/4"	2"	2½"
4500 kW	550	1000	300	1"	2½"	3"

operating principle

The two-stage Venturi mixer type 751 uses the Venturi effect: pressure falls as fluid crosses a reduced section. Gaseous LPG accelerates through the first-stage nozzle; the pressure drop draws atmospheric air through the filter and built-in check valves. The required air mixes with LPG in the mixing tube, then flows to the consumer. A programmable logic controller (PLC) controls the mixer; its complexity depends on the number of mixers and required consumer capacity.

PRESSURE TABLE

выходное давление синт. газа P СНГ (мбар)	давление газообрз. СНГ (за регулятором) пропан 35% - бутан 65% (бар)	давление газообрз. СНГ (перед регулятором) (бар)
100 ÷ 150	1,5 ÷ 2	≥ 2,5
150 ÷ 200	2 ÷ 2,4	≥ 3,0
250	2,4 ÷ 2,6	≥ 3, 5
300	2,8 ÷ 3,0	≥ 4, 0
350	3,2 ÷ 3,5	≥ 4, 5
400	4,0 ÷ 4,2	≥ 5, 0
500	≈ 5, 0	≥ 6, 0

Note:

For gas mixing above 500 mbar and up to 3.5 bar, GasTeh recommends a mixing system

with auxiliary compressed air, automatic control and SNG monitoring.

ЕМКОСТЬ

Maximum capacity varies with LPG composition, required SNG pressure and outlet pressure from 100 mbar to 500 mbar:

Тип	Максимальная емкость (мощность) мешалки
751- 2000	2000 kW (-3% ÷ +10%)
751- 3000	3000 kW (-3% ÷ +10%)
751- 4500	4500 kW (-3% ÷ +10%)

Note:

– pressure and capacity data apply to mixing stations at elevations up to 600 m.

Single-stage vaporizer/mixing station

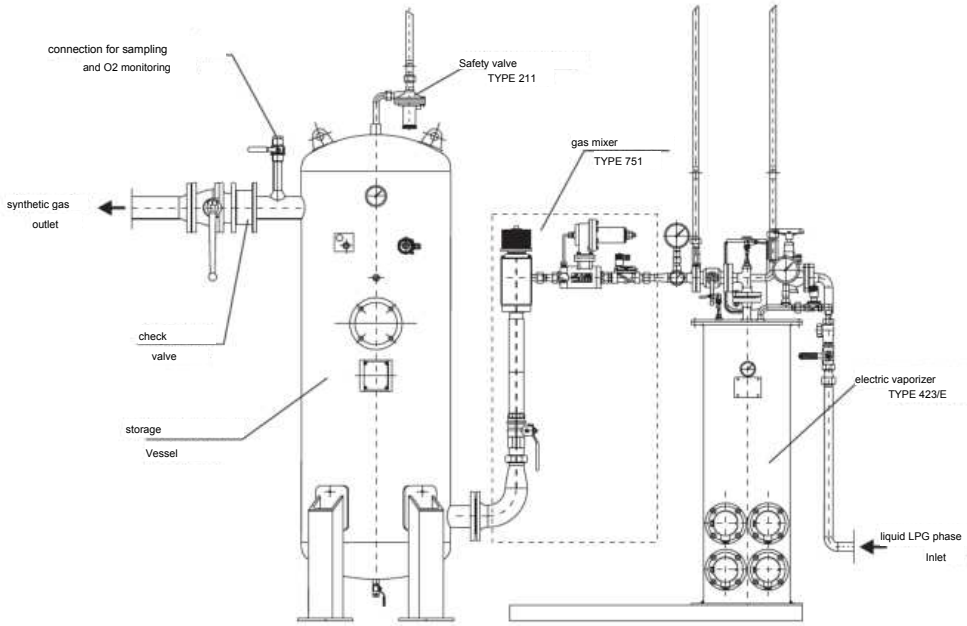

Multi-stage mixing station

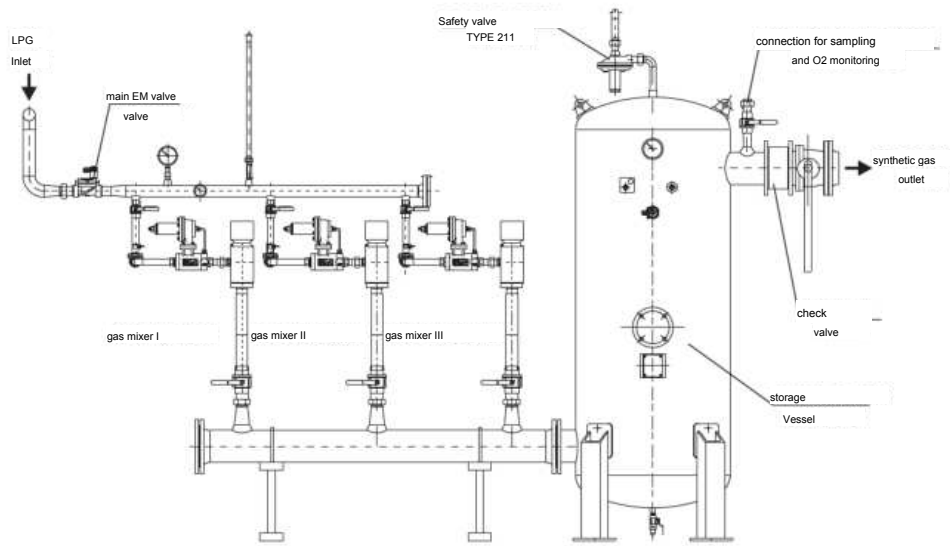

Each vaporizer/mixing or mixing station is supplied with a suitable control panel. The panel is outside the hazardous area; electrical equipment inside the station is Ex-compliant. Before startup and during servicing, GasTeh service technicians adjust the mixing station by sampling the SNG and checking O2. The manufacturer reserves the right to change technical data to improve the product.

product manufacturing.

SERIES
810

ELECTRIC HEATERS

ELECTRIC HEATERS

Ex STANDARD (EXPLOSION PROTECTION)

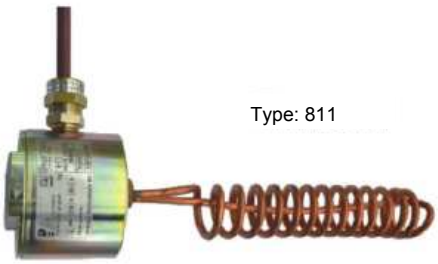

Type: 811

parameters

Power: type 811 – 2.5 kW

Type 812 – 4.5–16.5 kW

Protection type: Ex d II A T3

Temperature range: 20–110 °C

Ambient temperature: -20–60 °C

application

NATURAL GAS, PROPANE-BUTANE,

air, nitrogen and industrial gases

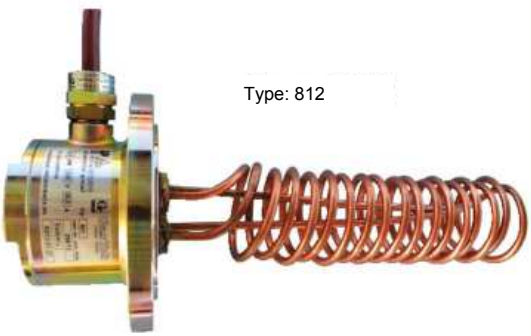

Type: 812

purpose

Electric heaters type 811 and 812 are explosion-protected devices for hazardous gas atmospheres. They provide 100% efficiency because all consumed electricity is converted into heat. They heat the heat-transfer fluid (water/concentrate) to its optimum operating temperature and are used in electric vaporizers and electric gas preheaters. They are installed horizontally in electric vaporizers and electric

gas preheaters.

diagram

Item	description
1.	Heater body
2.	Heater cover
3.	Seal
4.	coil
5.	Ex d IIC coupling
6.	Silicone cable
7.	Thread G1/2"

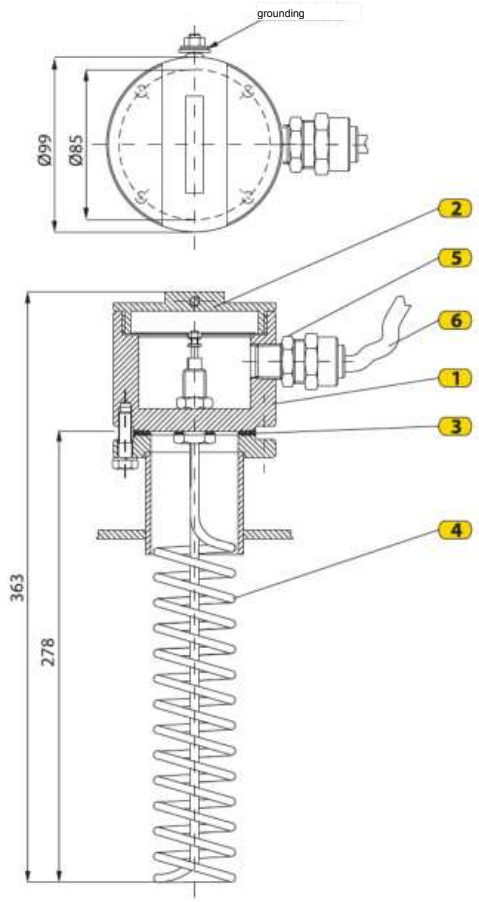

Type: 811 (2.5 kW)

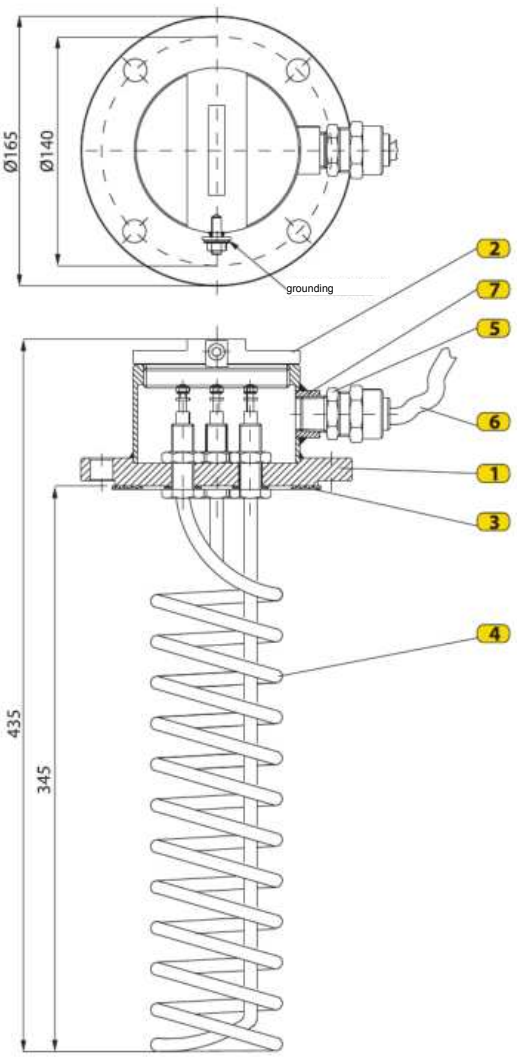

Type: 812 (4.5–16.5 kW)

operating principle

Electric heaters type 811 and 812 heat the heat-transfer fluid in electric vaporizers and electric gas preheaters. Each comprises a copper tube (coil), a body to which the coil is welded and an Ex coupling. All electrical-installation regulations must be observed during installation.

The manufacturer reserves the right to modify the technical data presented in this catalog as the equipment production process is improved.

SERIES
820

THERMOSTAT

THERMOSTAT – Ex STANDARD (EXPLOSION PROTECTION)



parameters

Connection size: DN15 (R1/2")

Protection type: Ex 4 || AT3

Temperature range: 20–110 °C

Sensitivity: +3 °C

Ambient temperature: -20–60 °C

application

NATURAL GAS, PROPANE-BUTANE

AIR, NITROGEN, WATER, ETC.

Type: 821



purpose

Thermostat type 821 is an explosion-protected device intended for operation in hazardous gas atmospheres. It controls the temperature of the heat-transfer fluid supplying heat to

electric vaporizers by switching the electric heater on and off at the correct time and indirectly sending a signal to the relay. It also controls the solenoid valves, keeping them energized and open within the heat-transfer fluid operating range. The solenoid valve closes at a temperature approximately 10% below the switch-on temperature. When the switch-on temperature is raised, the thermostat remains energized and keeps the solenoid valve open.

diagram

item	description
1.	Thermostat body
2.	cover
3.	Connection
4.	Nut
5.	Top cover
6.	Support
7.	Coupling
8.	Capillary thermostat
9.	Terminal
10.	Sensor sheath
11.	Two-part epoxy resin

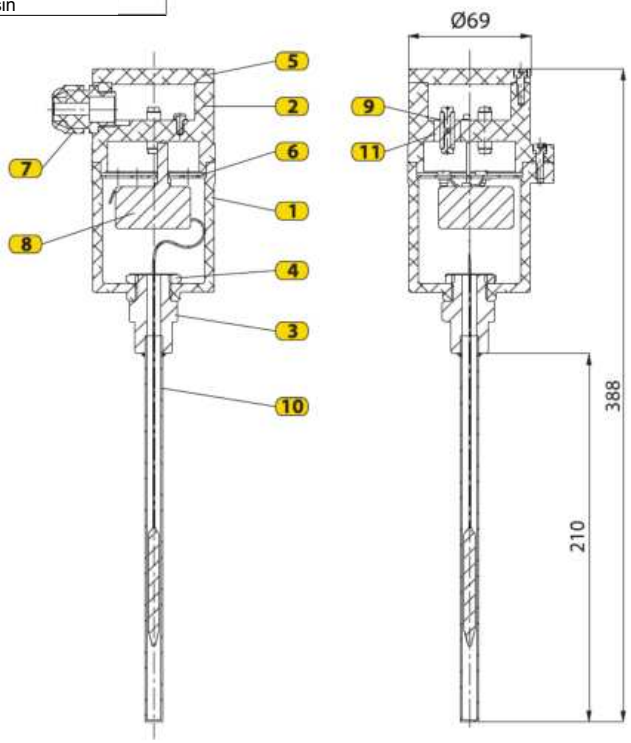

operating principle

Thermostat type 821 controls the heater. PT100 sensors measure gas and heat-transfer fluid (water) temperatures and send signals to converters in the safe area. These comply with Ex ia IIC T4; their relay outputs directly control the solenoid valve. Protected to Ex m II T4, the valve provides safety if the required temperature is not reached or power fails. During installation, follow electrical and workplace-safety rules and use materials meeting the applicable standard.

The manufacturer reserves the right to modify the technical data presented in this catalog as the equipment production process is improved.

SERIES 910

WATER NOZZLE

911-UM



Type: 912-RM



parameters

Sizes:

– angular nozzle (female/male thread) G3/8", G1/2"

– straight nozzle (female thread) G1/2"

Working pressure: 1–10 bar

Application: WATER

purpose

The water spray nozzle creates a water curtain in case of fire or provides cooling under direct sunlight. The spray angle is 90° to 160°. Typical applications include cooling industrial plants and refineries, fire extinguishing in warehouses and water dispersion in

agro-industrial facilities.

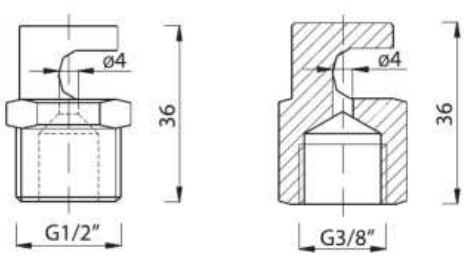

Type: 911-UM

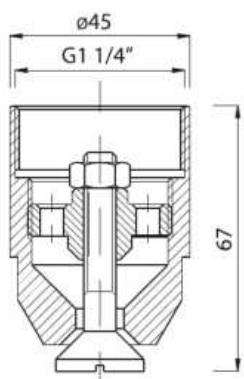

Type: 912-RM

Based on water pressure, number of nozzles and distance from the fire zone, the required quantity of water:

– fire extinguishing: 7–30 l/min/m²;
– for fire containment: 6–16 l/min per m²;
– object cooling: 10 l/min/m².

FLOW TABLE

Тип	Давление (бар)			
	2	2,5	3	3,5
911-UM	11,5	13	14,5	15,5
912-RM	55		70	

Flow values are given in l/min and apply to water with density ρ=1000 kg/m³

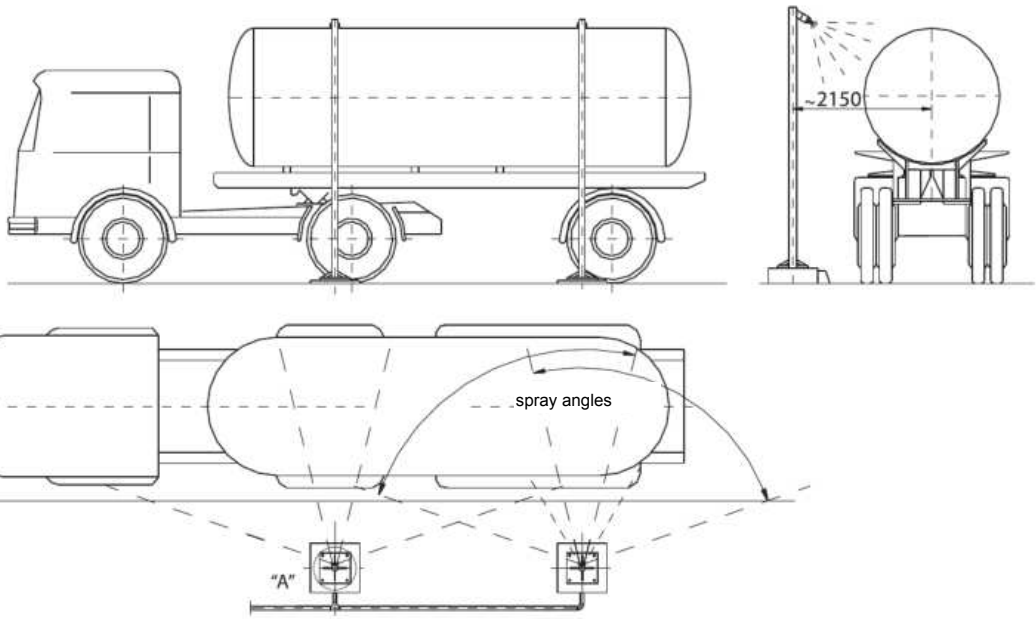

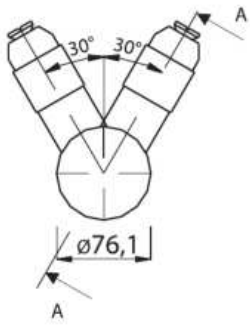

DETAIL "A"

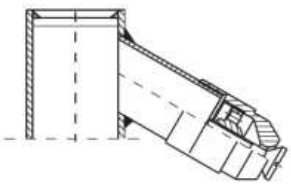

SECTION A–A

+7 (812) 380-83-63

office@gasteh.ru

reception@atrest.ru

Saint Petersburg, Obukhovskoy Oborony Ave., 120, lit. K

LLC "Avangard Stroy Trest"